Refrigeration Plant Energy Efficiency.

How to minimize running costs!

Dr Michael Bellstedt
Minus40 Pty Ltd
Sydney

Refrigeration in the meat industry

- Refrigeration – the largest, yet most neglected power user!
- The energy and carbon cost threats
- Synthetic refrigerants – get out now!
- Energy efficiency
  - Where is power used?
  - Importance of plant stability
  - Overview of energy savings opportunities
- Conclusions and Recommendations
- Government finance and funding

MINUS 40

Energy

Refrigeration in meat industry

- Used everywhere….
  - Office air-conditioning
  - Boning and processing rooms
  - Carcass chillers and holding chillers
  - Freezer rooms
  - Blast chillers and freezers
  - Plate freezers (carton and offal)
- 30% to 70% of site power consumption!!!!
- Yet in many cases refrigeration plant technologies from ‘70s and ‘80s

MINUS 40

NSW Business Electricity Prices 1995 - 2020

(2009/10 $)

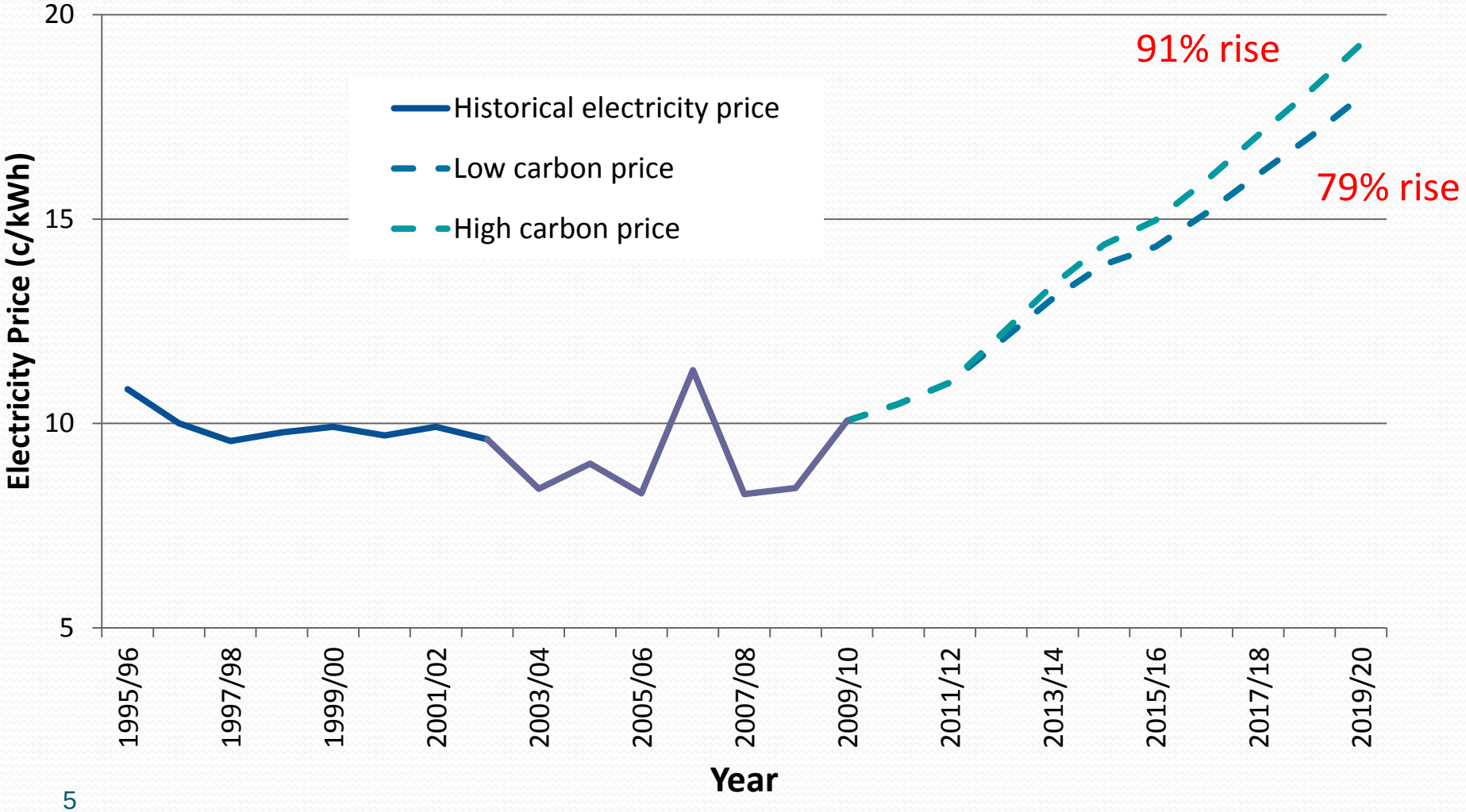

Power cost impact

	Small	Medium	Large
Annual consumption	5 GWh	10 GWh	25 GWh
2011 annual cost	$500,000	$1,000,000	$2,500,000
2015 annual cost	$750,000	$1,500,000	$3,750,000
Increase	**$250,000**	**$500,000**	**$1,250,000**

Investing in power savings is a really good idea!!!

Refrigerants overview

- Ammonia – high efficiency, environmentally benign, special design requirements
- Carbon dioxide – low temperatures, environmentally benign, special design requirements
- Synthetics (R22, R404a, R134a) – commonly used for small systems, often low efficiency, environmentally problematic

Choice of refrigerant and system

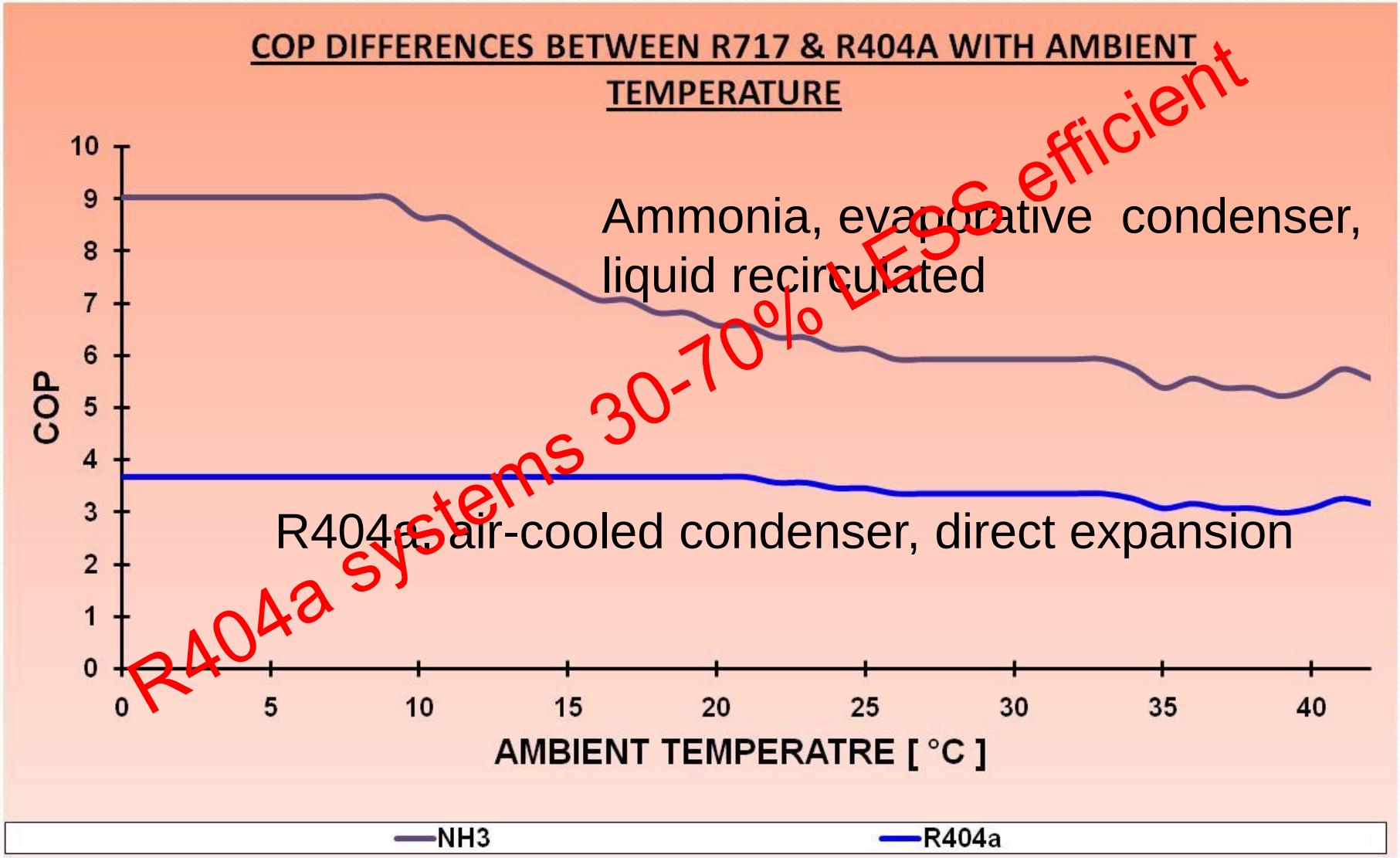

Ammonia and synthetic refrigerants:

Energy efficiency

- Ammonia systems generally exceed most synthetic refrigerant systems in fundamental cycle efficiency.
- Many system options well suited to ammonia are not feasible for synthetic refrigerant systems (e.g. flooded evaporators).
- Most ammonia systems use evaporative condensers, whilst synthetic systems generally use air-cooled condensers.
- Synthetic refrigerant systems use direct expansion (DX) for nearly all evaporators – this restricts low condensing pressures, a key energy saving technique.
- Therefore many energy efficiency options presented here are <u>not</u> applicable to synthetic refrigerant systems, or of <u>limited</u> application.

Carbon

Carbon levy on synthetic refrigerants?

- As of **1 July 2012**, an additional levy of $23/carbon ton will be charged on imported synthetic refrigerants
- Synthetic refrigerants are intense global warming gases with very high Global Warming Potential (GWP).
- R404A has a GWP of 3,300 – 1kg of R404A = 3,300kgs of CO_2
- Therefore an additional levy of $75/kg will be charged on R404A!
  - A typical small CR system with 50kg of refrigerant would attract $3,750 in levies alone when re-charged
- This will cause a significant disincentive to use high GWP refrigerants after 1 July 2012

Global Warming Potentials

Refrigerant	**100yr GWP**
R717 (Ammonia)	0
R744 (CO_2)	1
R404a	3,862
R134a	1,410
R22	1,780

Releasing 1kg of R404a = 3,862 kgs of CO_2!
= emissions of 1 car driven 15-20,000km!!

Effect of Carbon Tax on R404A

Costs / kg	Tax rate / ton CO_2			
	$0	$20	$40	$60
Base cost	$30	$30	$30	$30
Carbon Tax	$0	$80	$160	$240
Handling cost	$0	$16	$32	$48
Nett cost	**$30**	**$126**	**$222**	**$318**
% increase	**0%**	**420%**	**740%**	**1,060%**

Impact on R404A plant running costs

- Typical HFC leakage 20%/annum
- 500-2,000kgs R404A typical for many sites
- Hence 100-400kgs leakage per annum
- Currently $3,000 to $12,000 annual refrigerant costs
- At $30/ton carbon tax, this will increase to $22,000 to $88,000 per annum.
- A major leak causing full refrigerant loss could cost >$400,000 in one hit!!

MINUS 40

Ammonia

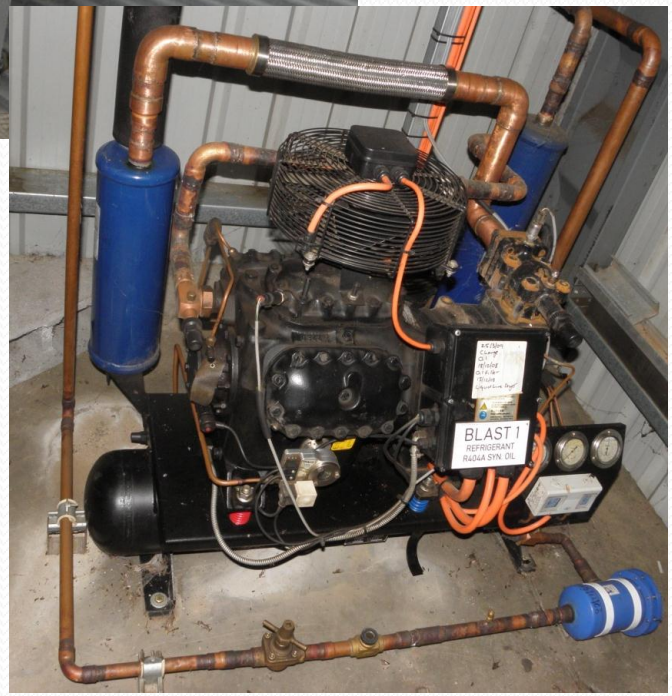

Freon

Energy Savings Opportunities

Refrigeration energy savings opportunities

Strategy	Typical plant	Optimized plant
Variable head pressure	12%	3%
Compressor control	15%	5%
Remote control optimisation	8%	5%
Heat recovery	2%	0%
Defrost management	2%	1%
Variable cold store temperatures	2%	0%
Variable evaporator fan speeds	2%	0%
Condensate sub-cooling	4%	2%
Design review	10%	2%
Maintenance review	2%	0%
TOTAL	**45%**	**18%**

Where is the energy used?

Single stage indirect refrigeration system:

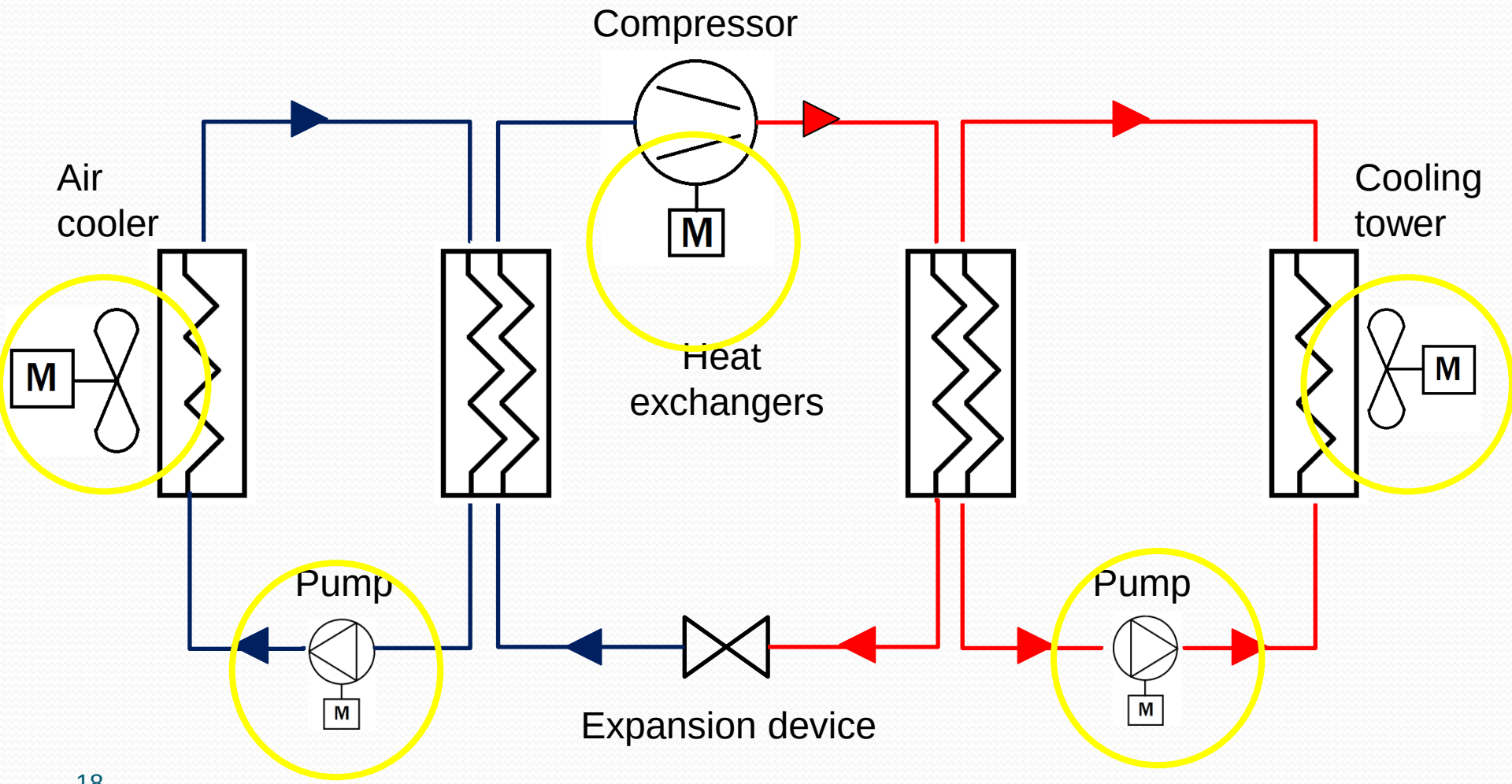

Refrigeration Plant stability – first priority

- Plant stability: stable operating conditions + smooth response to changes
- Stable operation = efficient operation.
- Instabilities caused by:
  - On/off condenser fan operation
  - Simple level control mechanism on vessels
  - Compressor cycling in response to load changes
  - Poor control strategies
- Hence achieving STABLE plant operation is generally a pre-requisite to effective reduction of energy use.

MINUS 40

Plant stability – discharge pressures

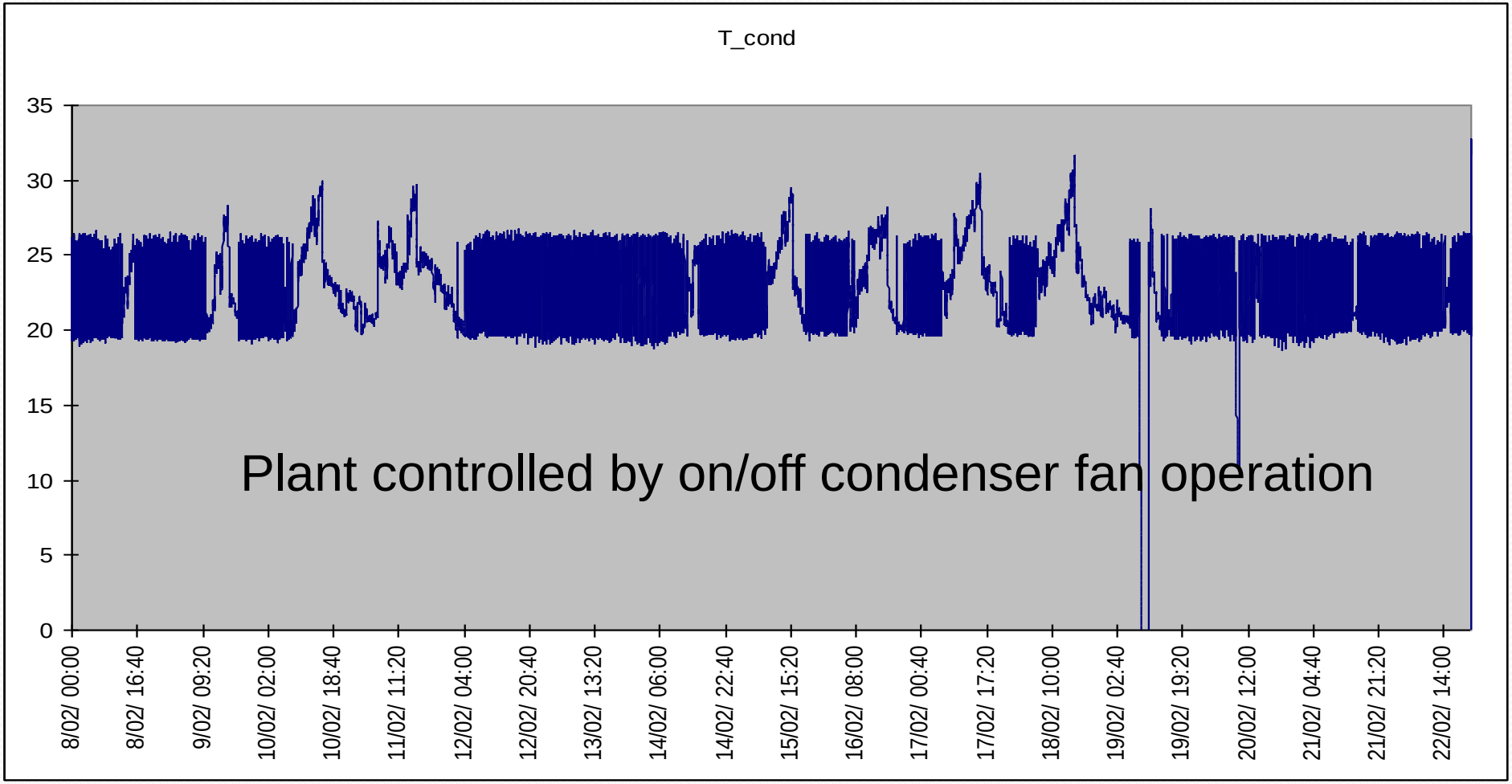

Plant stability – impact on remaining plant

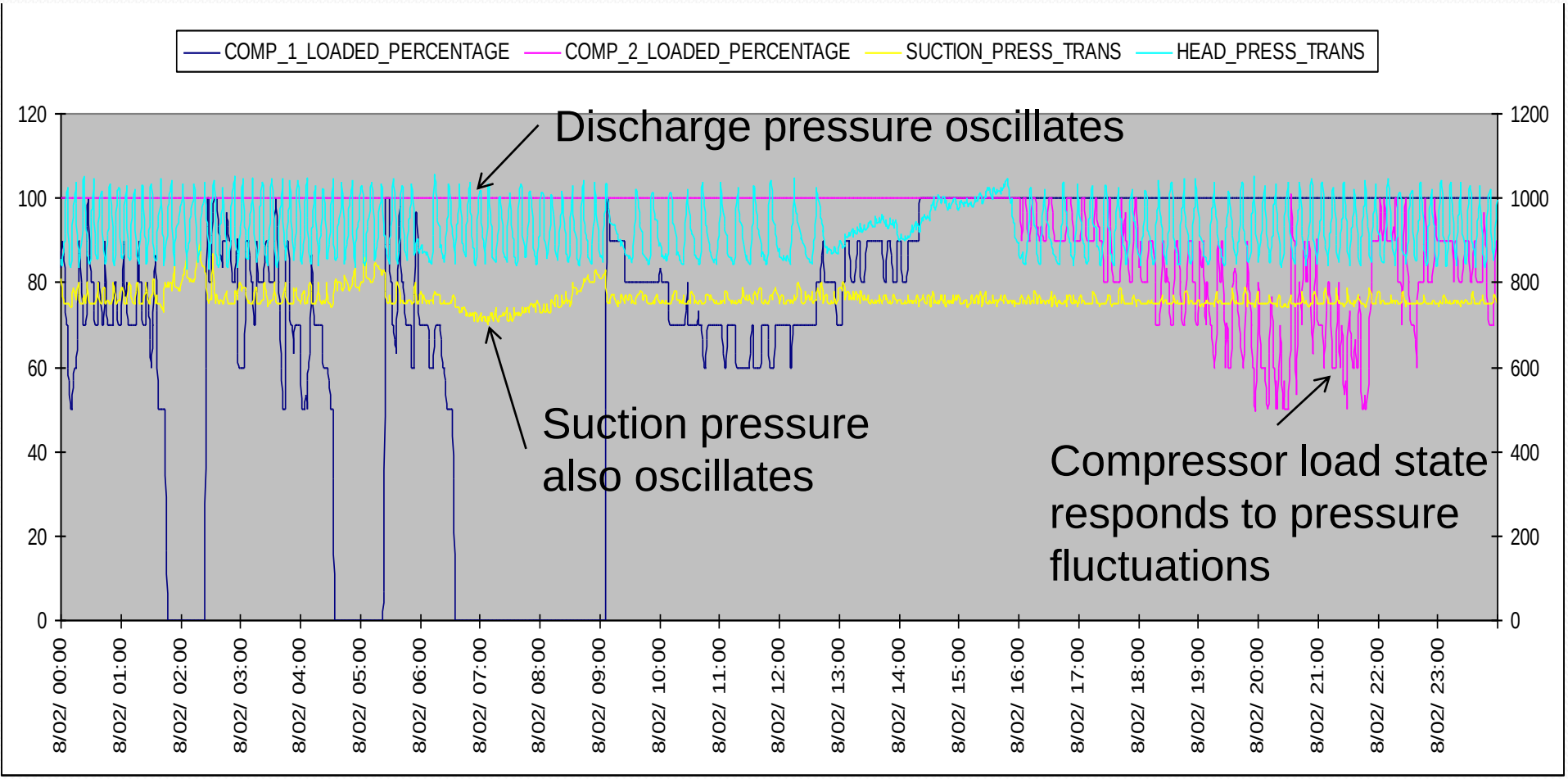

1) - Fans

Saving fan power with a VSD

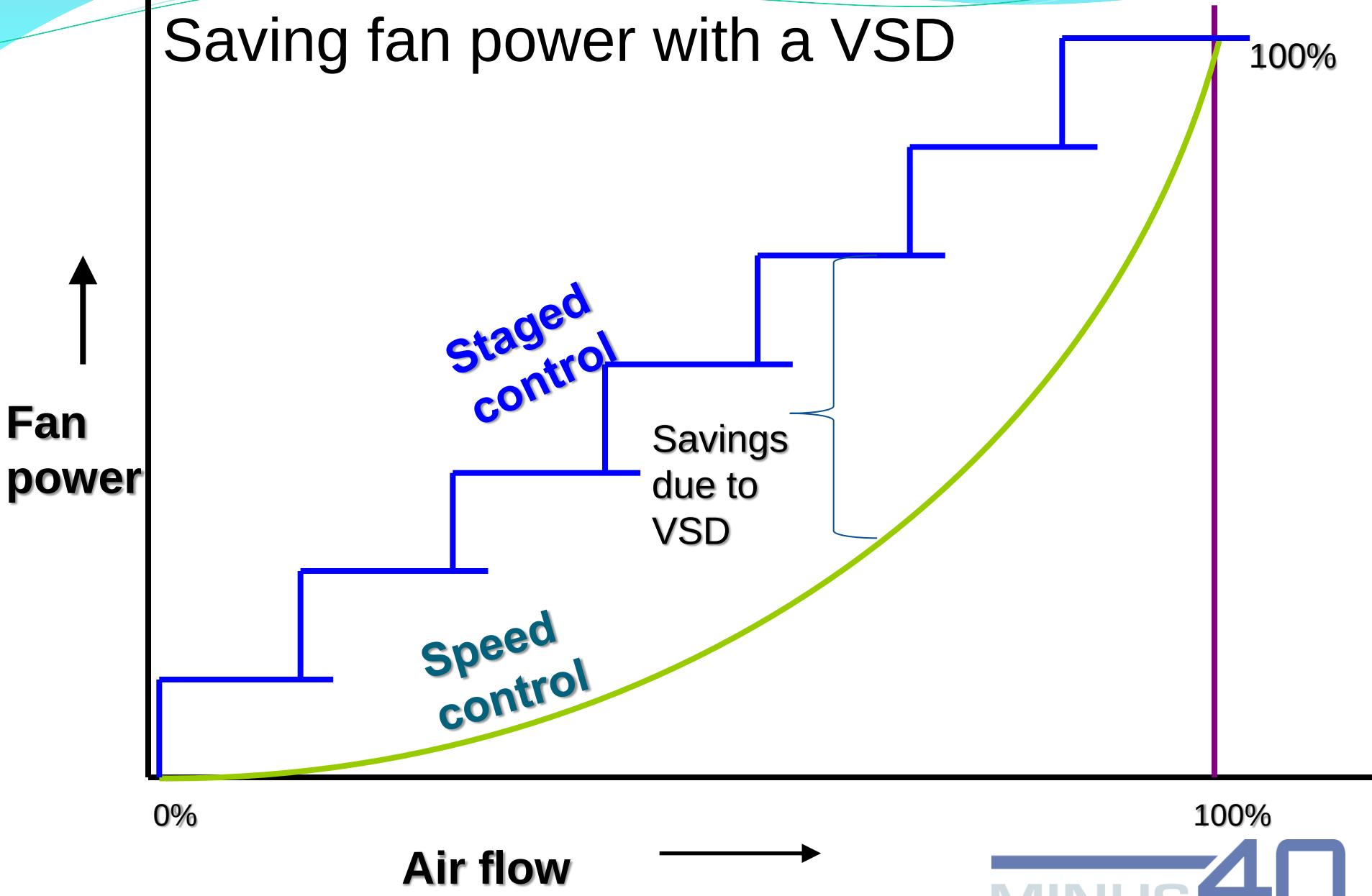

Fan VSD savings

- 10kW fan motor
- Run fan 50% of the time = 5kW average use
- Run fan at 50% fan speed =1.25kW average use
- Save 3.75 kW = $5,000/annum
- 10kW VSD costs <<$5,000!!!

MINUS 40

Variable evaporator fan speeds

Most evaporator fans run 24/7

Alternatives:

- Fit VSDs to fans (one VSD per evaporator)
- Reduce fan speed when doors closed say >30 minutes
- Reduce fan speed at night/on weekends
- Run low speed (20%), then pulse speed to 70% to mix air

Evaporator fans on VSD

- Freezer evaporator fan motor – 1.5kW
- Refrigeration power required to remove heat – 0.75 kW, hence 2.25 kW total
- Annual power costs for 24/7 operation: $3,000!
- Use VSD at 70% average fan speed – 0.5kW fan power + 0.25kW = 0.75kW total
- Annual power costs for 24/7 operation: $1,000!
- Annual savings: $2,000 PER FAN!!

MINUS 40

2) – Variable head pressure

Variable head pressure control

- Compressor power reduces 2-3% per 1ºC reduction in condensing temperature
- Many plants run at constant head pressure setpoint throughout year
- At cool ambient and /or part load conditions significant savings can be achieved by allowing head pressure to <u>reduce</u>
- Additional savings achievable by operating condenser fans at variable speed, rather than staging fans

MINUS 40

Compressor + condenser fan
Summer conditions

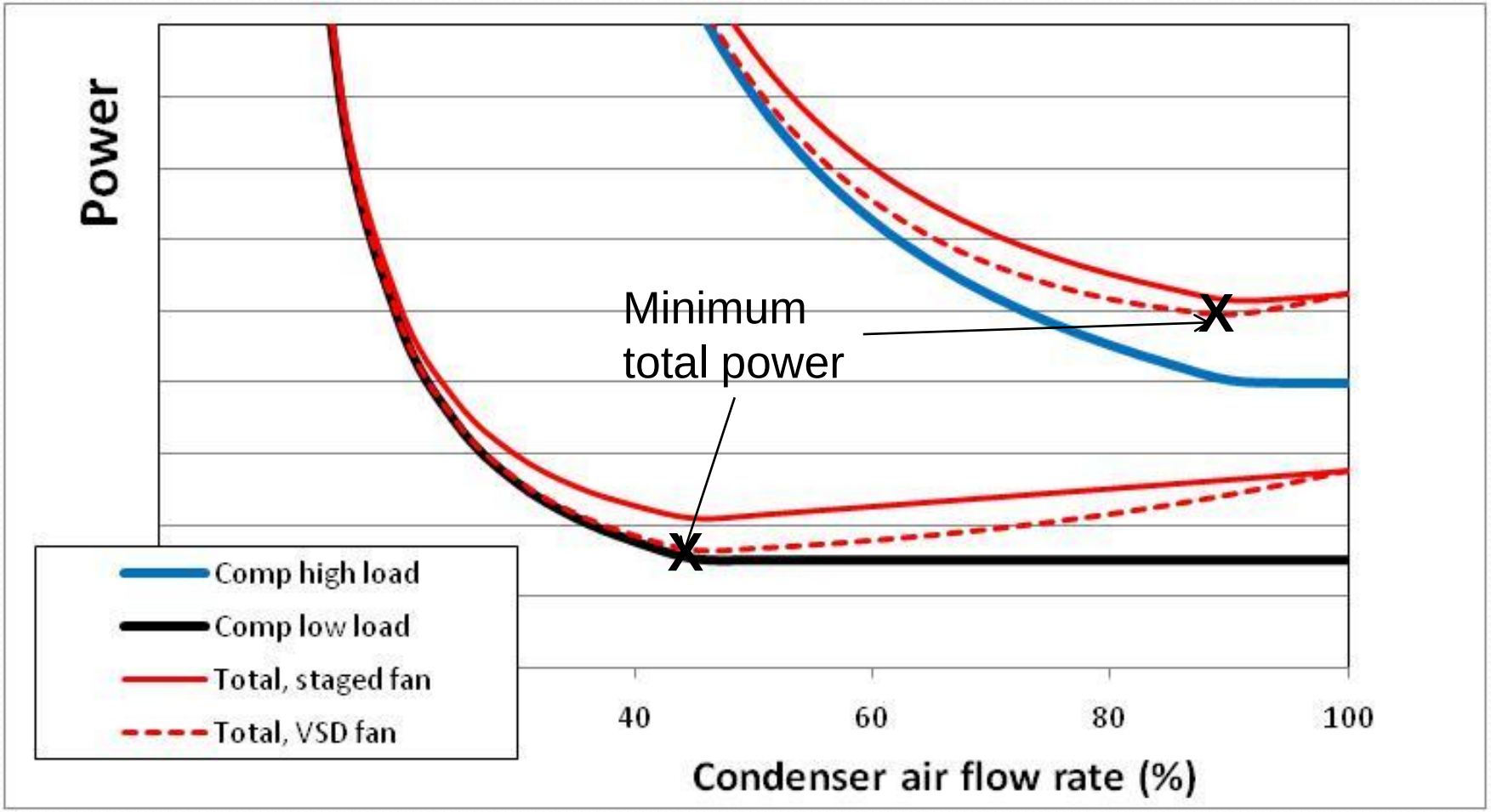

Compressor + condenser fan
Winter conditions

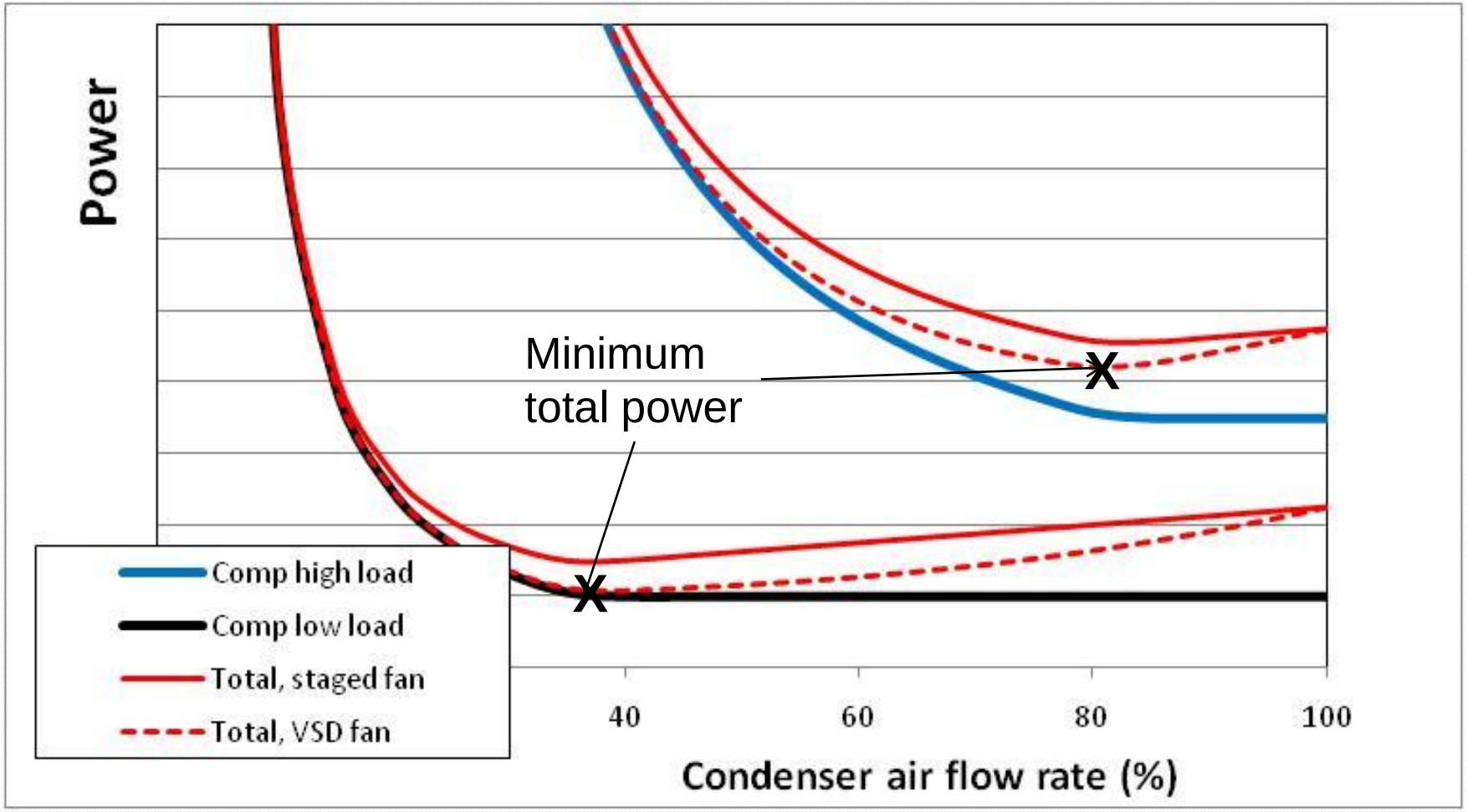

Example: VHPC with ambient sensor (left) and VSDs on condensers (below)

MINUS 40

3) – Compressor control

Screw compressor capacity control
Slide vs variable speed

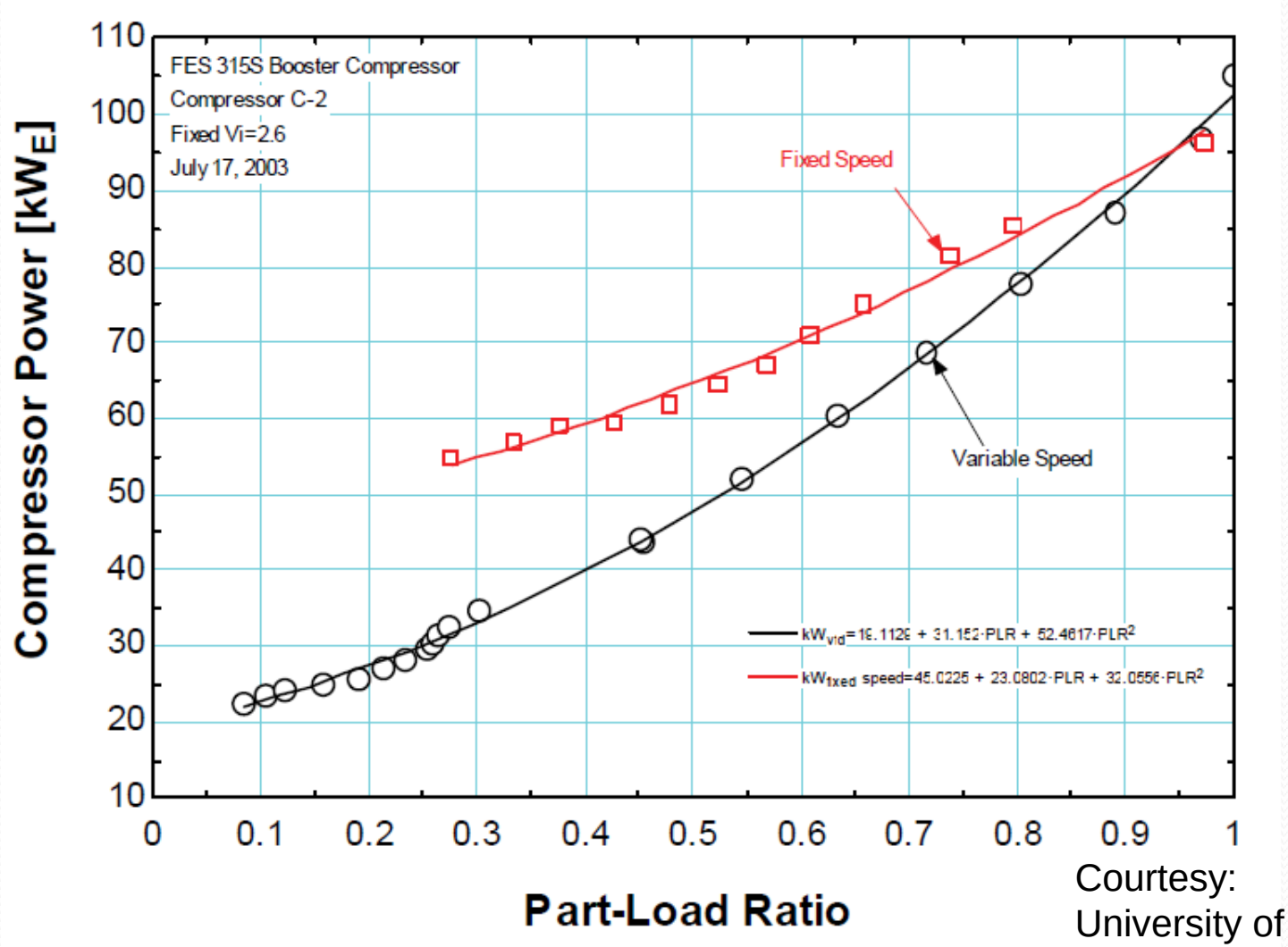

Courtesy:
University of Wisconsin

Unloaded screw compressor

Problem: Compressor at 70%
slide position!

Solution: VSDs for screw compressors

Two-compressor plant

efficient loading

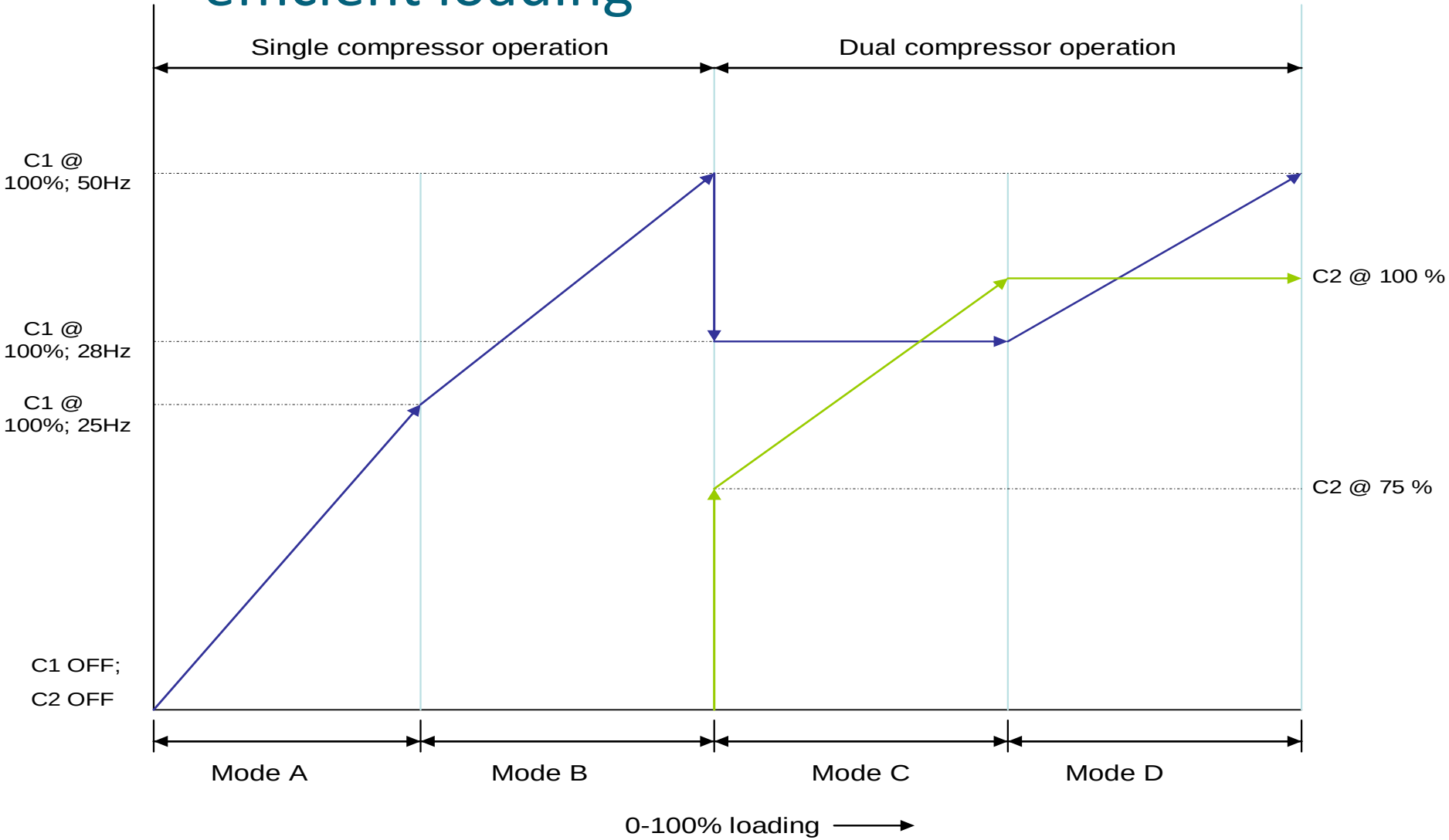

Two-compressor plant

efficient unloading

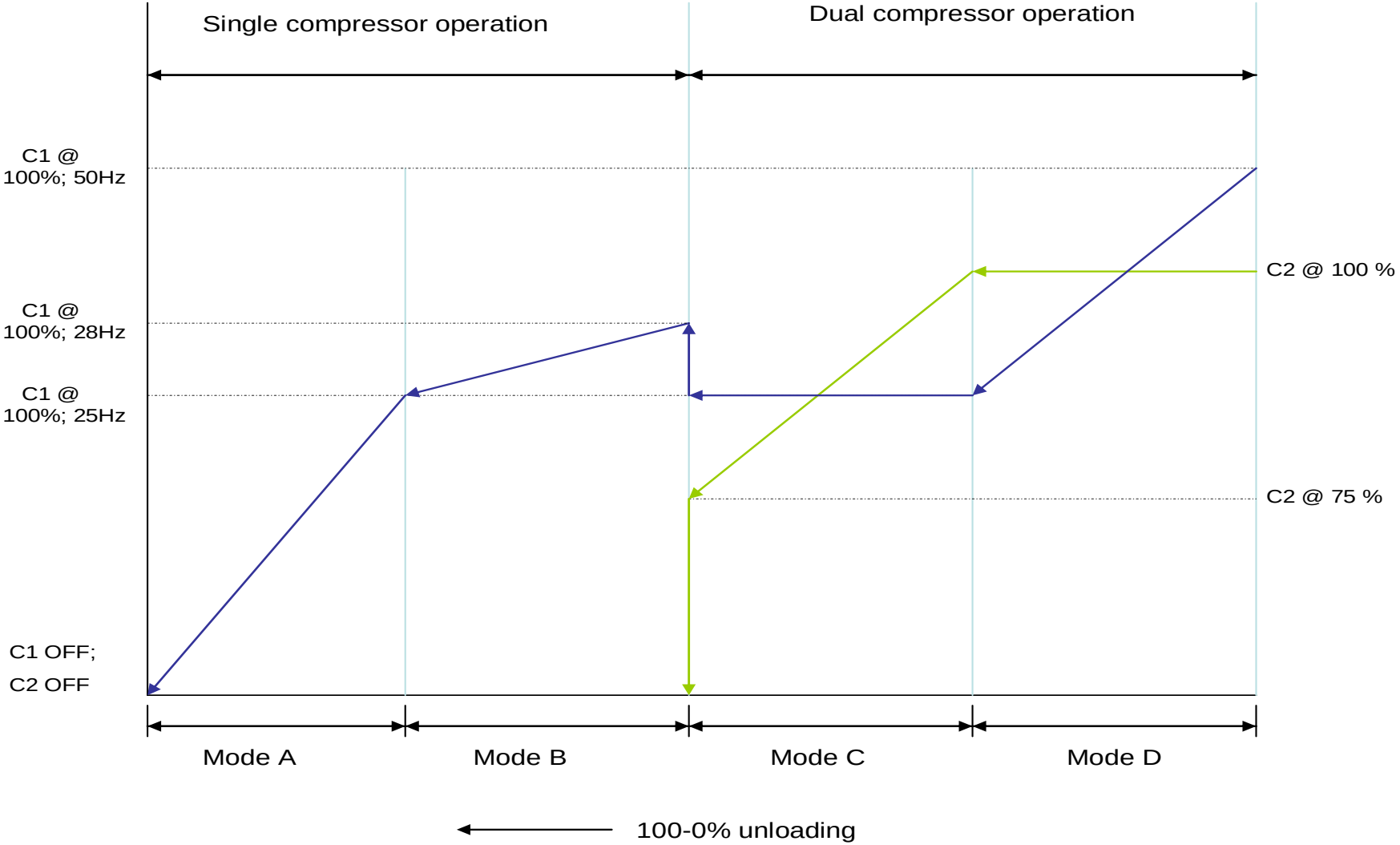

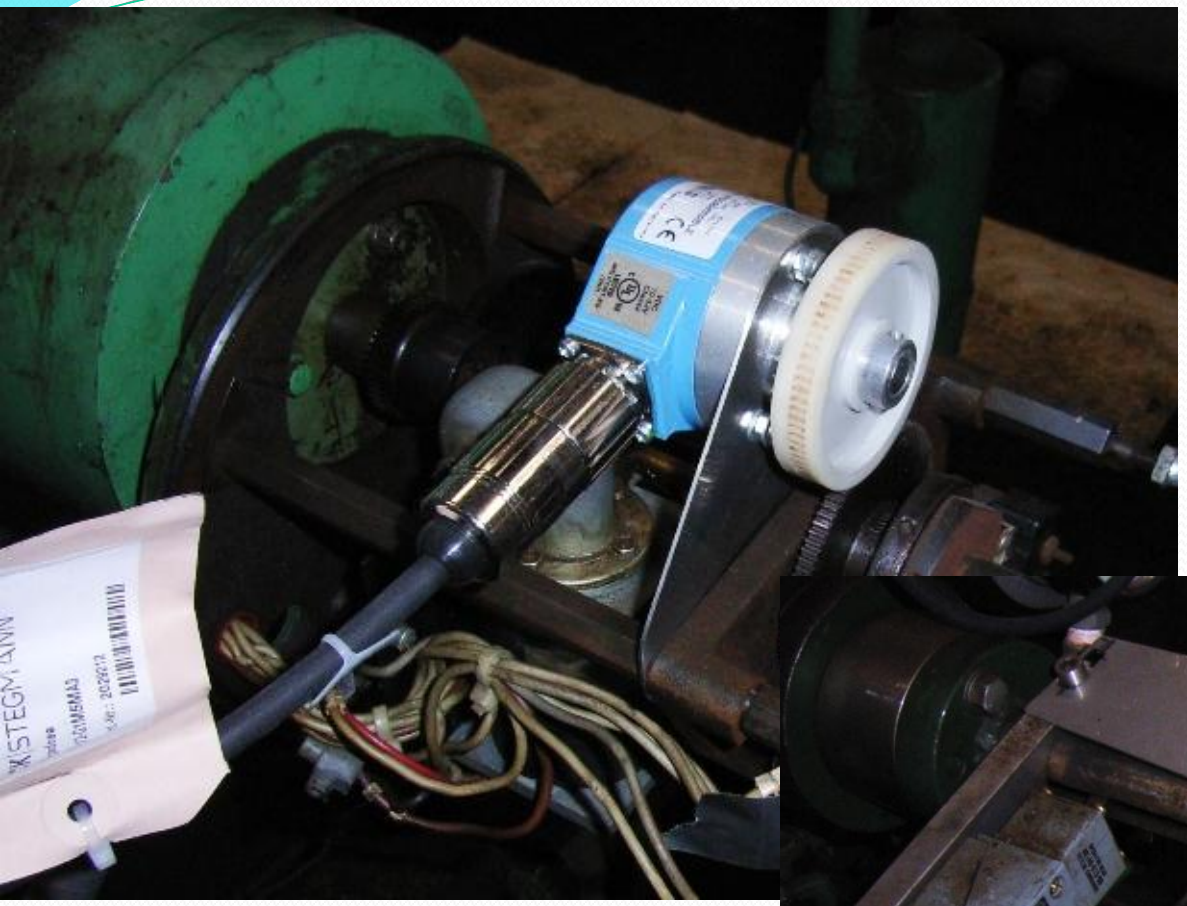

Slide position transducers on Hitachi (l) and Stal (below)

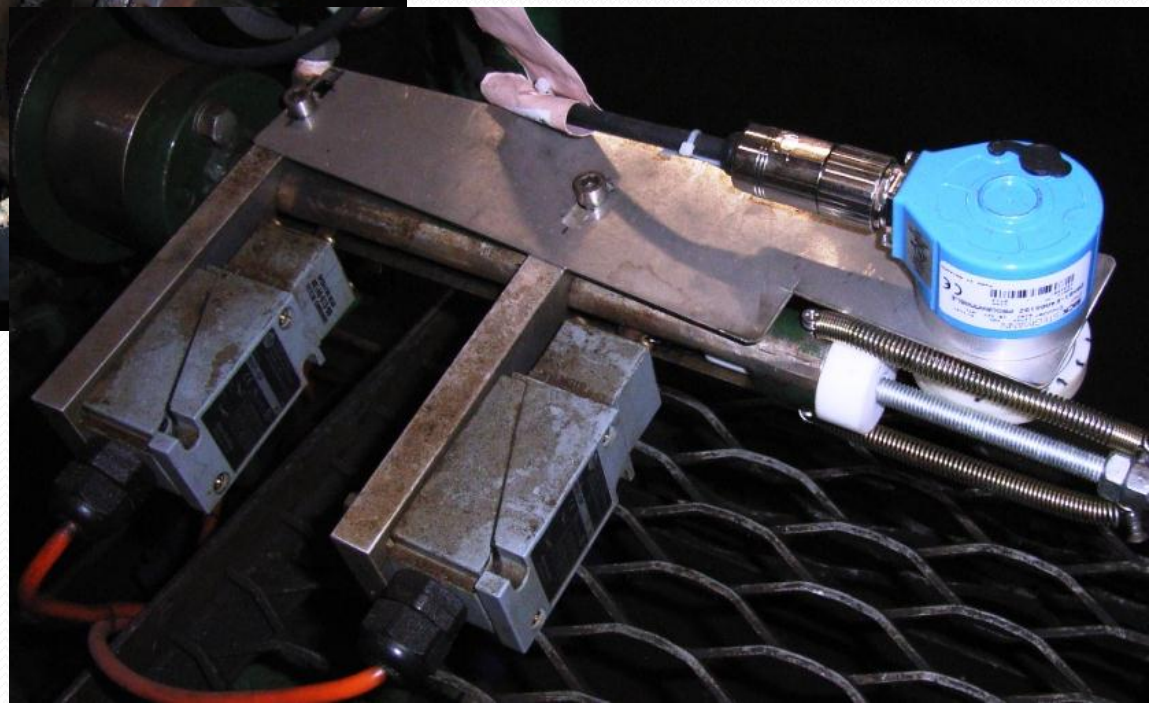

MINUS40

4) – Remote optimization

The plant control challenge

- Operating conditions vary
  - Summer/winter ambient conditions
  - Production changes
  - Seasonal production
  - Day/night/weekend operation
- Optimum operating conditions are a moving target
  - Changing plant operating conditions
  - Changing services costs and rates
  - Plant changes and improvements

MINUS 40

Principle of remote control optimisation

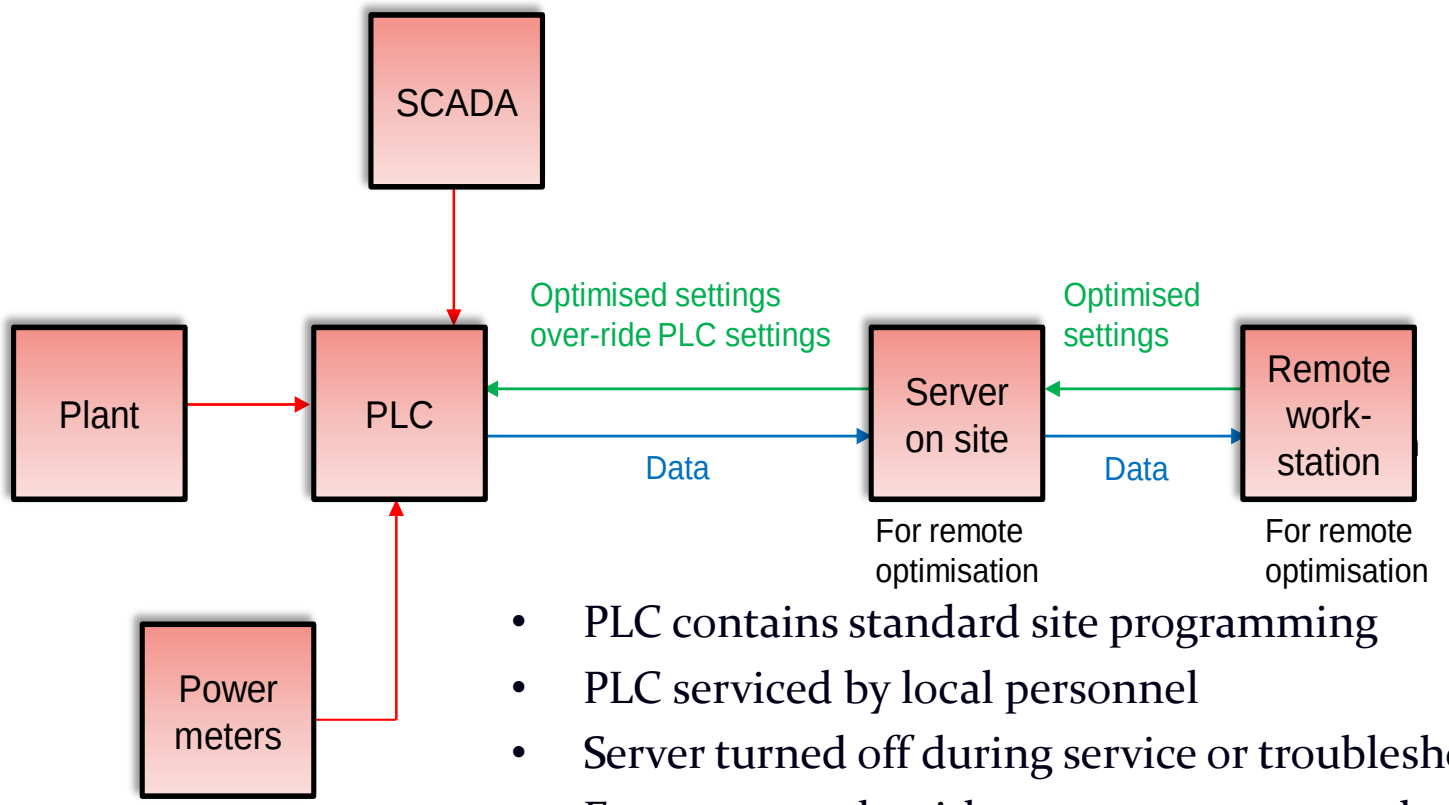

- PLC contains standard site programming
- PLC serviced by local personnel
- Server turned off during service or troubleshooting work
- Energy saver algorithms on server, cannot be affected by PLC changes
- Verification easily done by comparing performance with server ON and OFF

5) – Heat recovery

Heat recovery

- Freezer room subfloor heating (<20ºC)
- Domestic Hot Water/ Hand wash (40ºC)
- Space heating (40-60ºC)
- Washdown water (55-60ºC)
- CIP, sterilisation (80-90ºC)
- Boiler feedwater (any)

MINUS 40

Temperature levels

	Freon	Ammonia	Oil cooling	Heat pump
Slab heating (<20ºC)	●	●	●	
DHW (40ºC)	●	●	●	○
Space heating (40-60ºC)	●	●	●	○
Washwater (55-65ºC)	○	●	●	●
CIP (80-90ºC)				●

Heat recovery from ammonia systems

- Three options, each with pro's and con's:
  - Low stage discharge
  - High stage discharge
  - Oil coolers
- More heat available from high stage discharge, but
- Heat recovery from low stage discharge REDUCES power consumption
- Analysis required to find best solution for each site

Heat recovery with high stage desuperheater

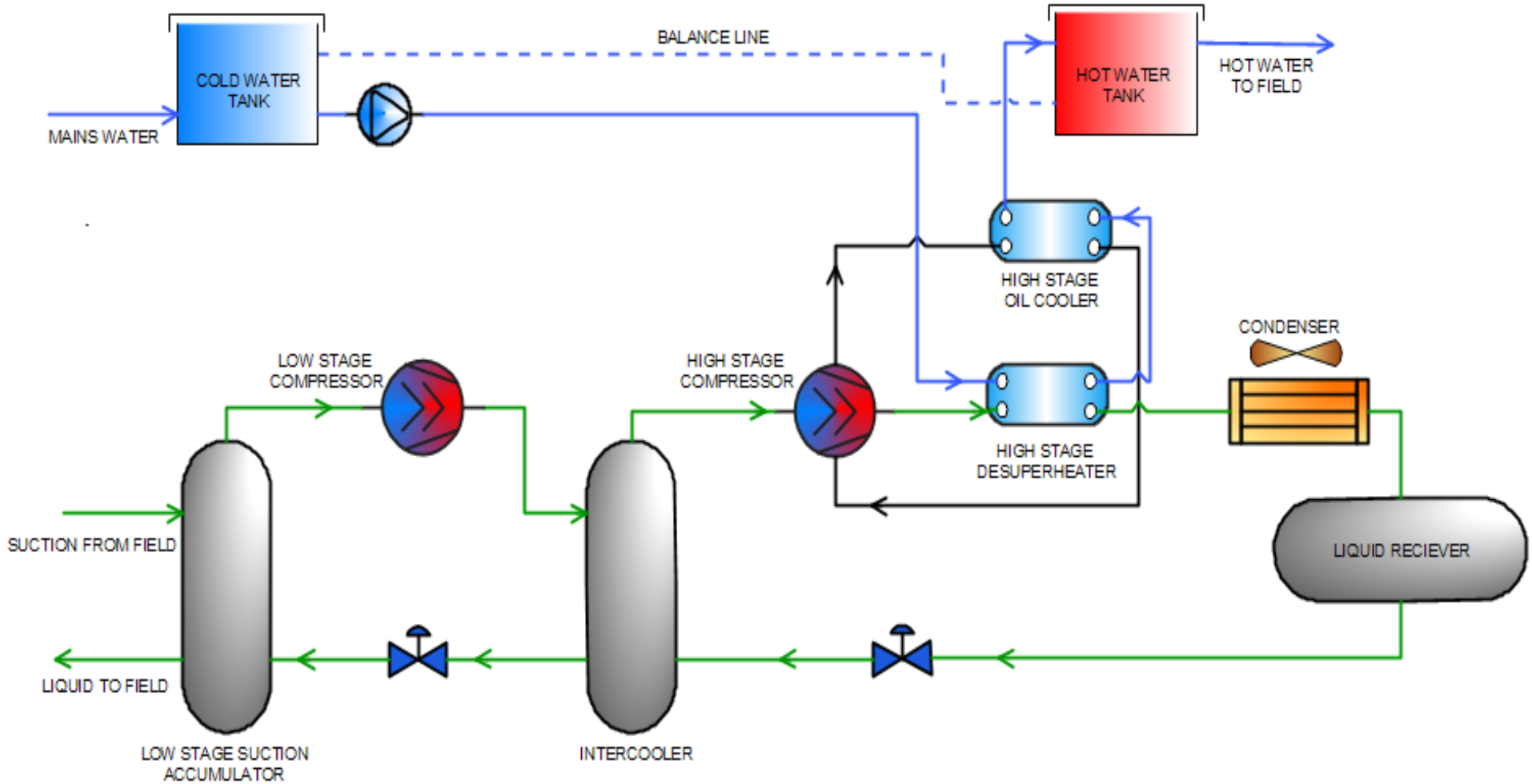

Heat recovery with low stage desuperheater

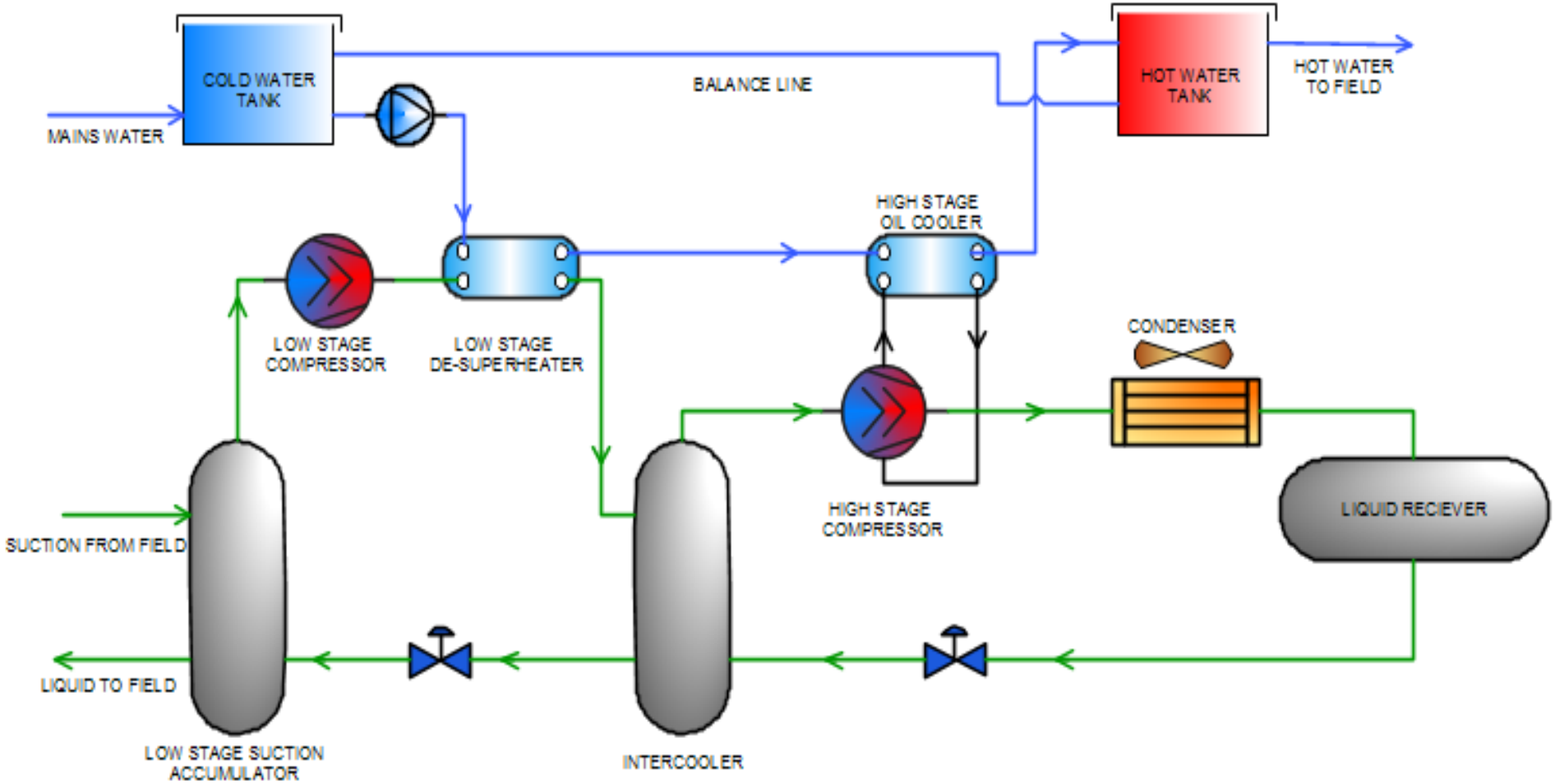

6) – Condensate subcooling

Liquid refrigerant sub-cooling

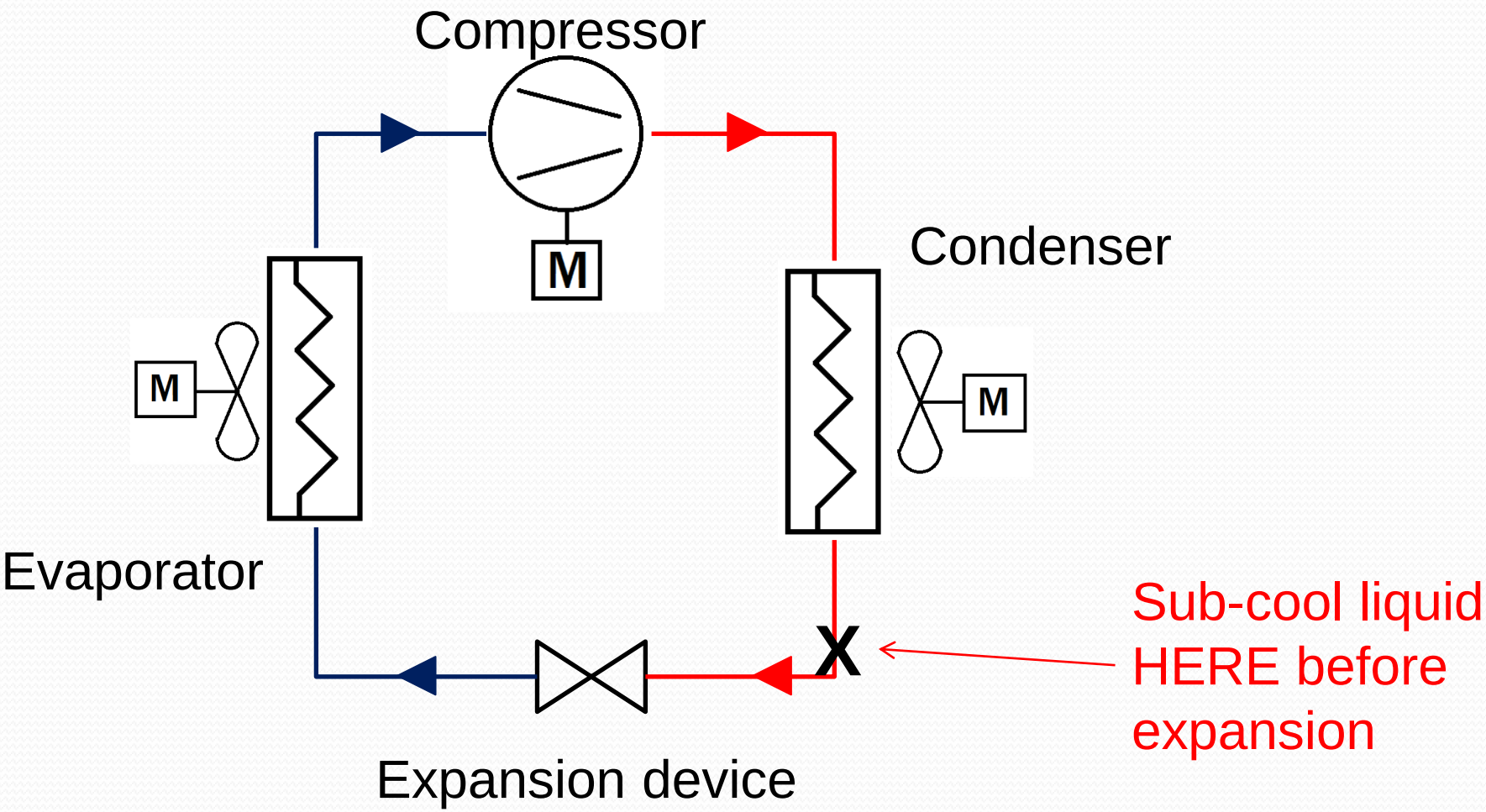

Condensate sub-cooling with feedwater

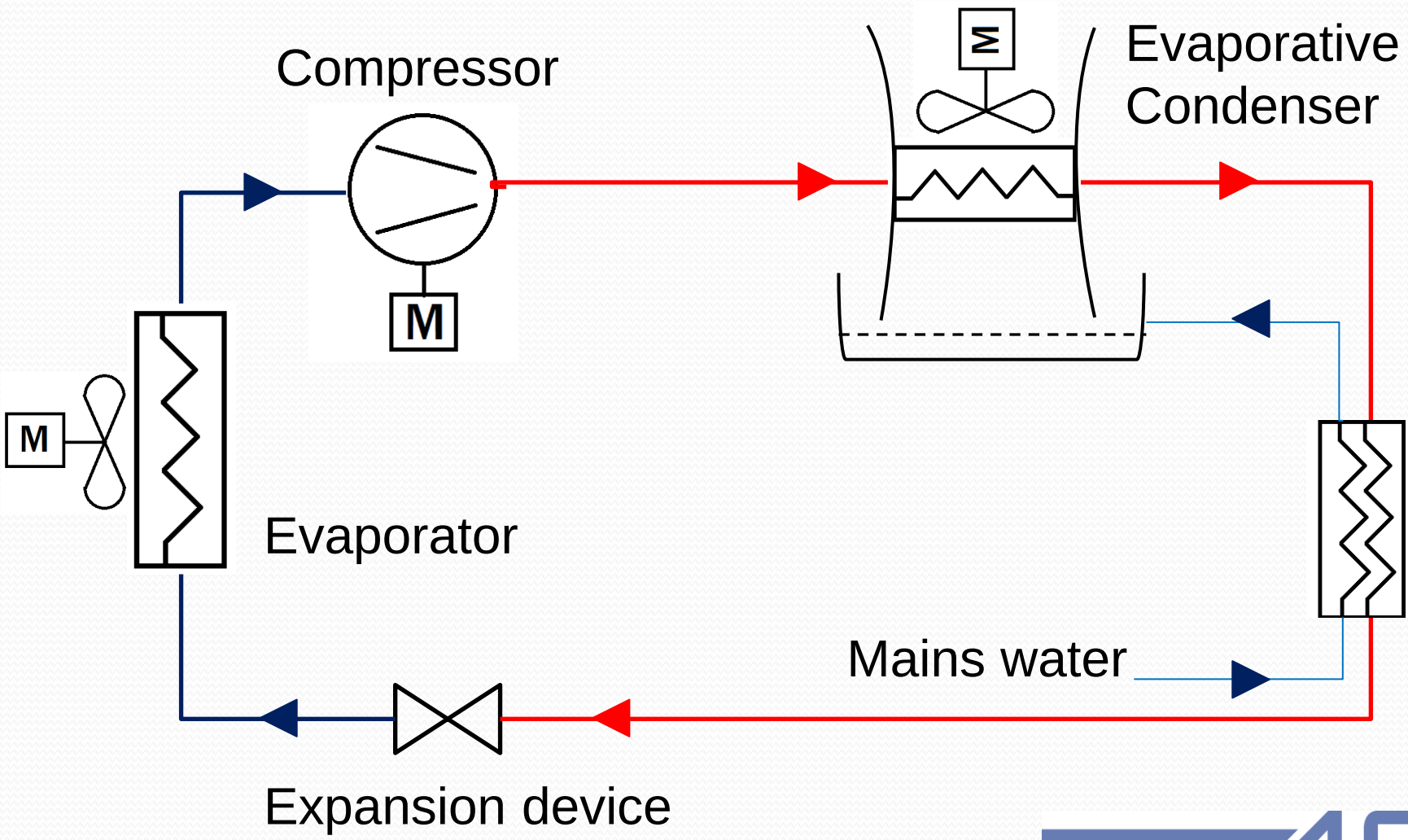

Condensate sub-cooling with feedwater

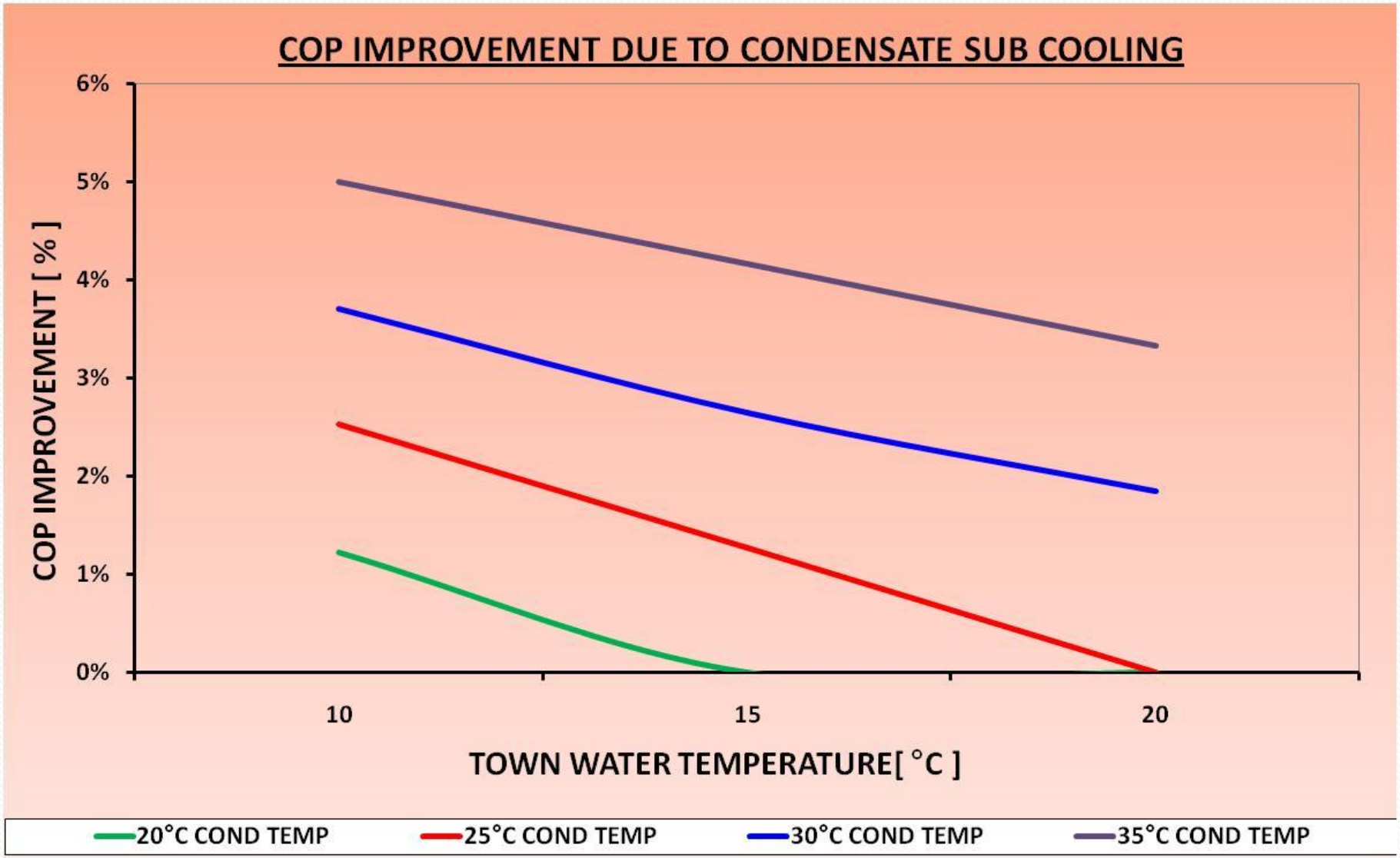

7) – Economizer on screw compressors

Economizer on screw compressor

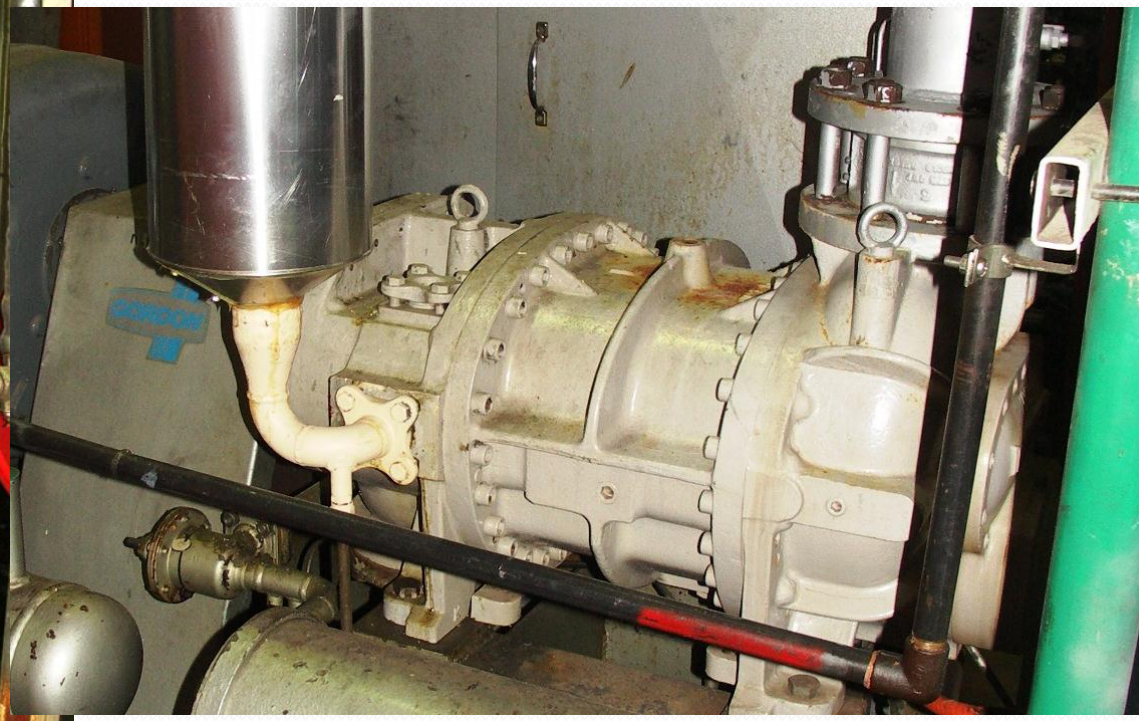

MINUS 40

Economized refrigeration system

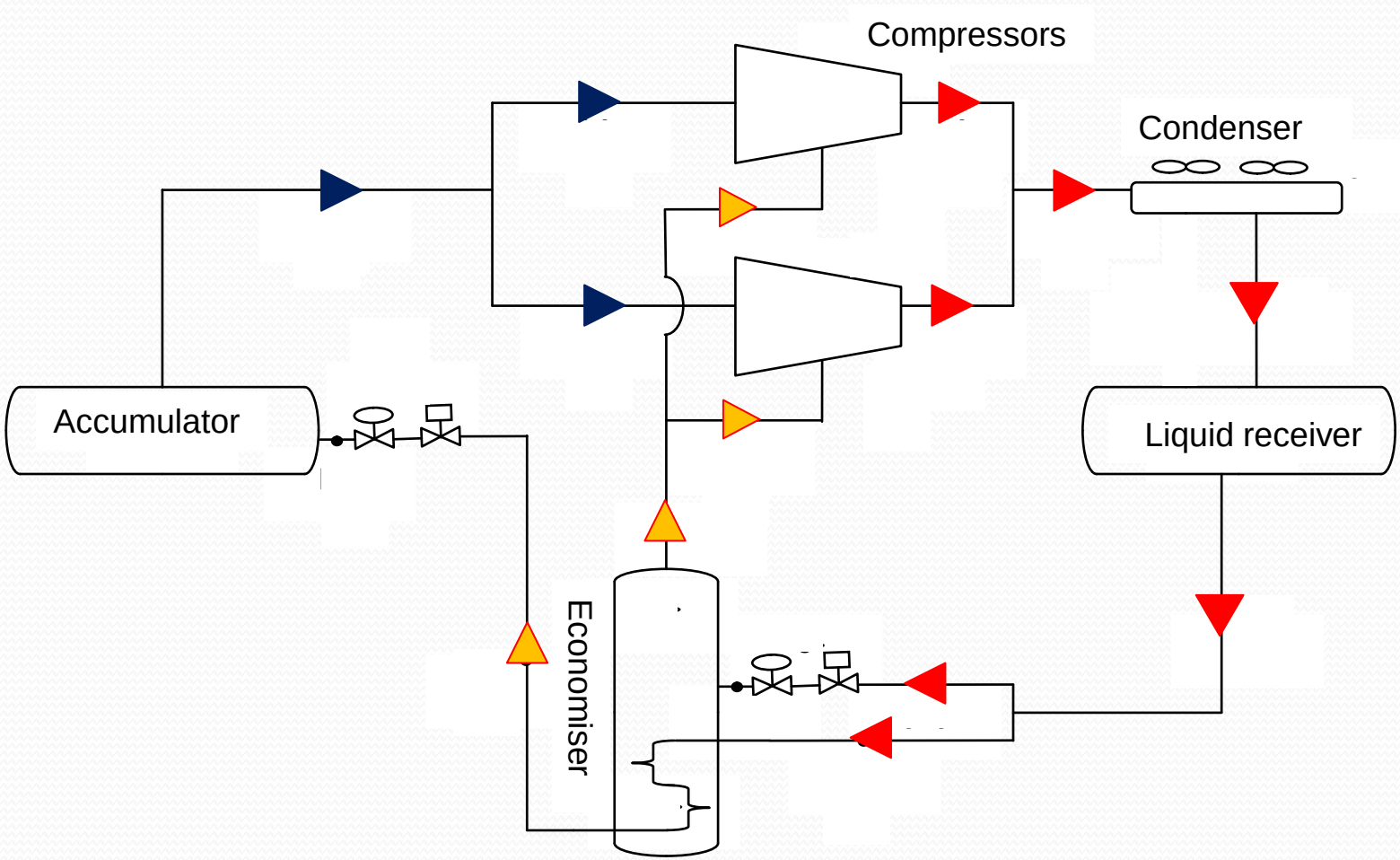

Economizer sub-cooling - COP

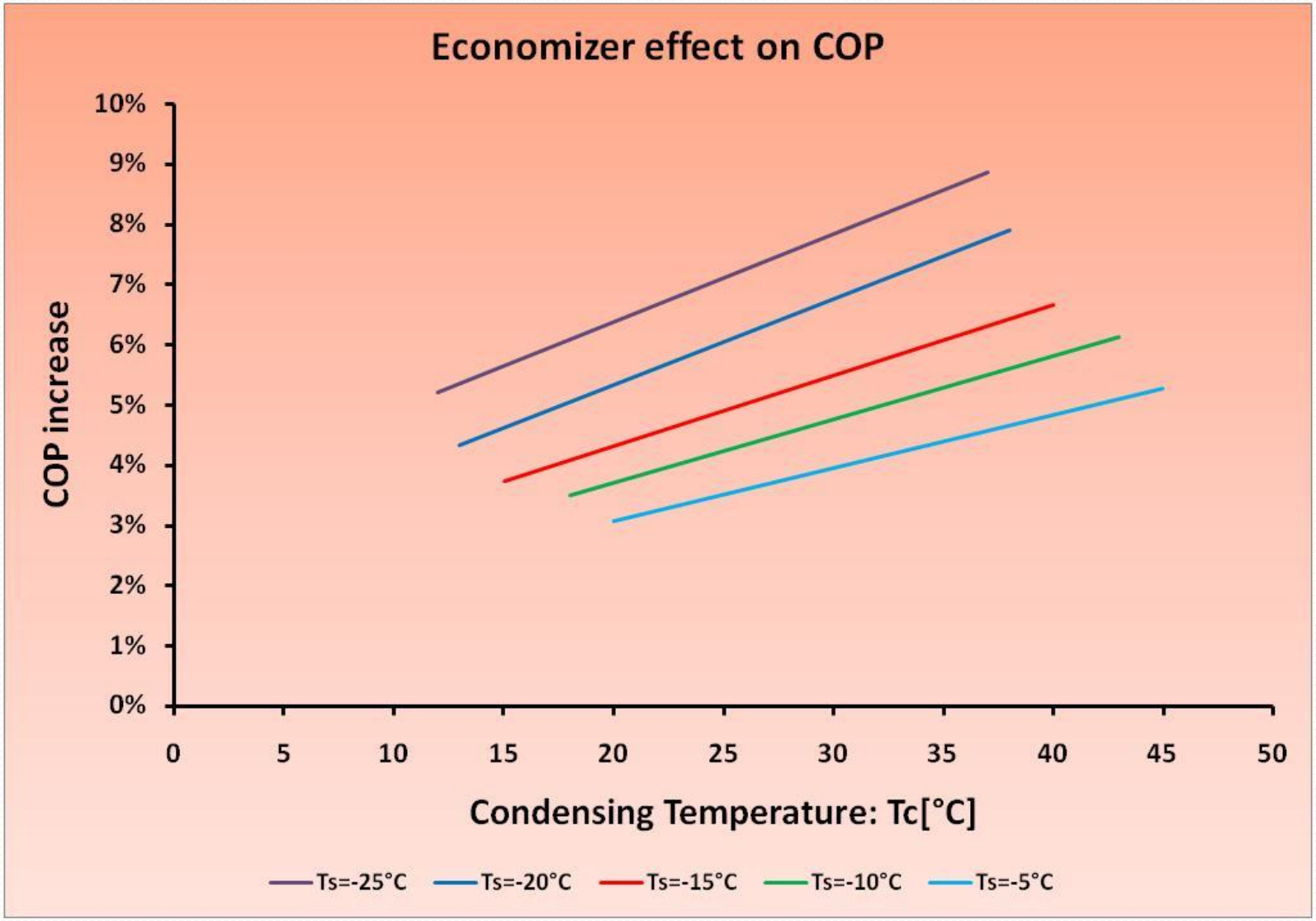

Economizer sub-cooling - kWR

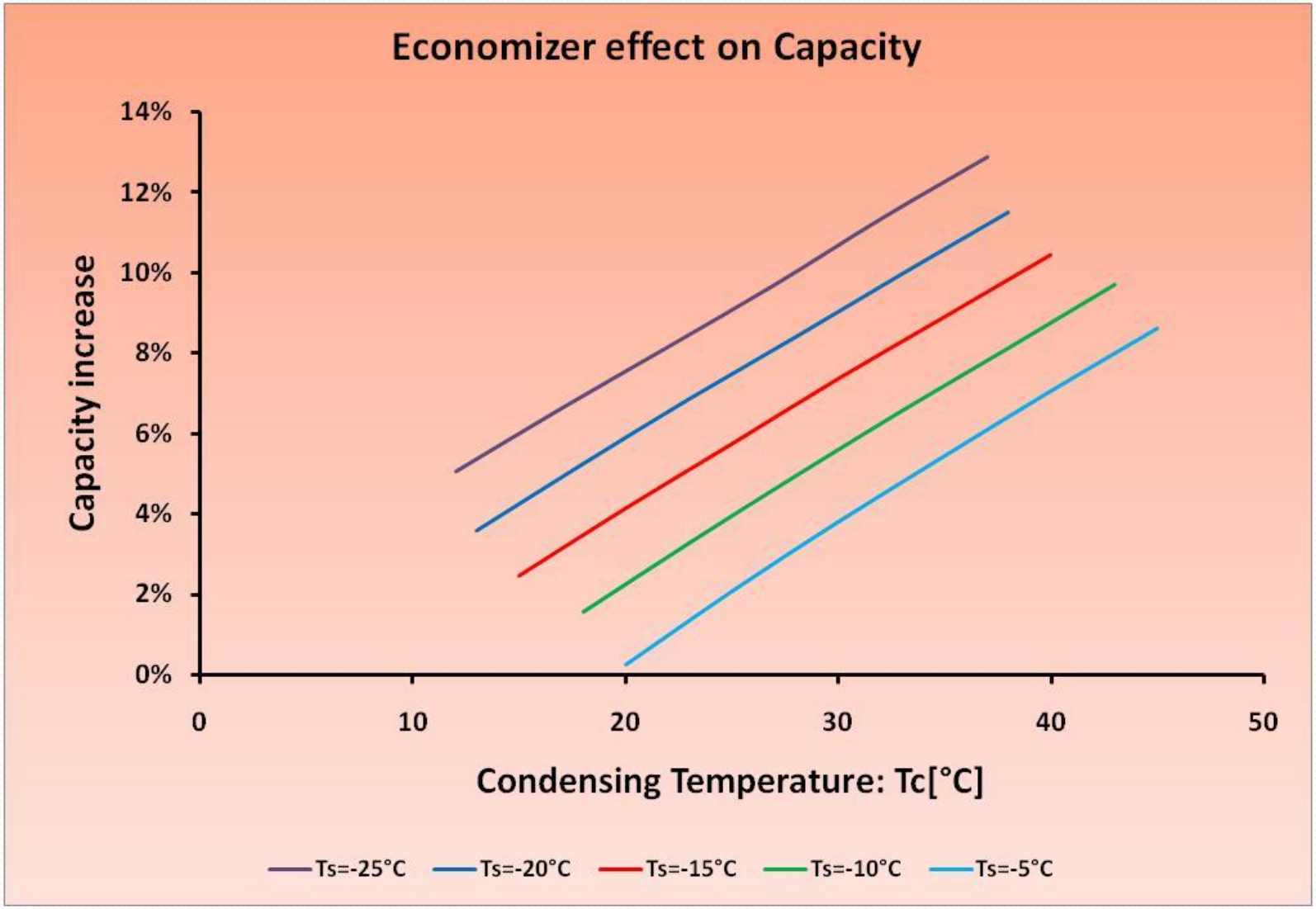

8) – Suction splitting

Suction splitting

- Split suction lines to run higher temperature loads at higher suction pressure
  - Eg. Blast freezers and holding freezers
  - Eg. Chiller rooms and processing rooms

MINUS 40

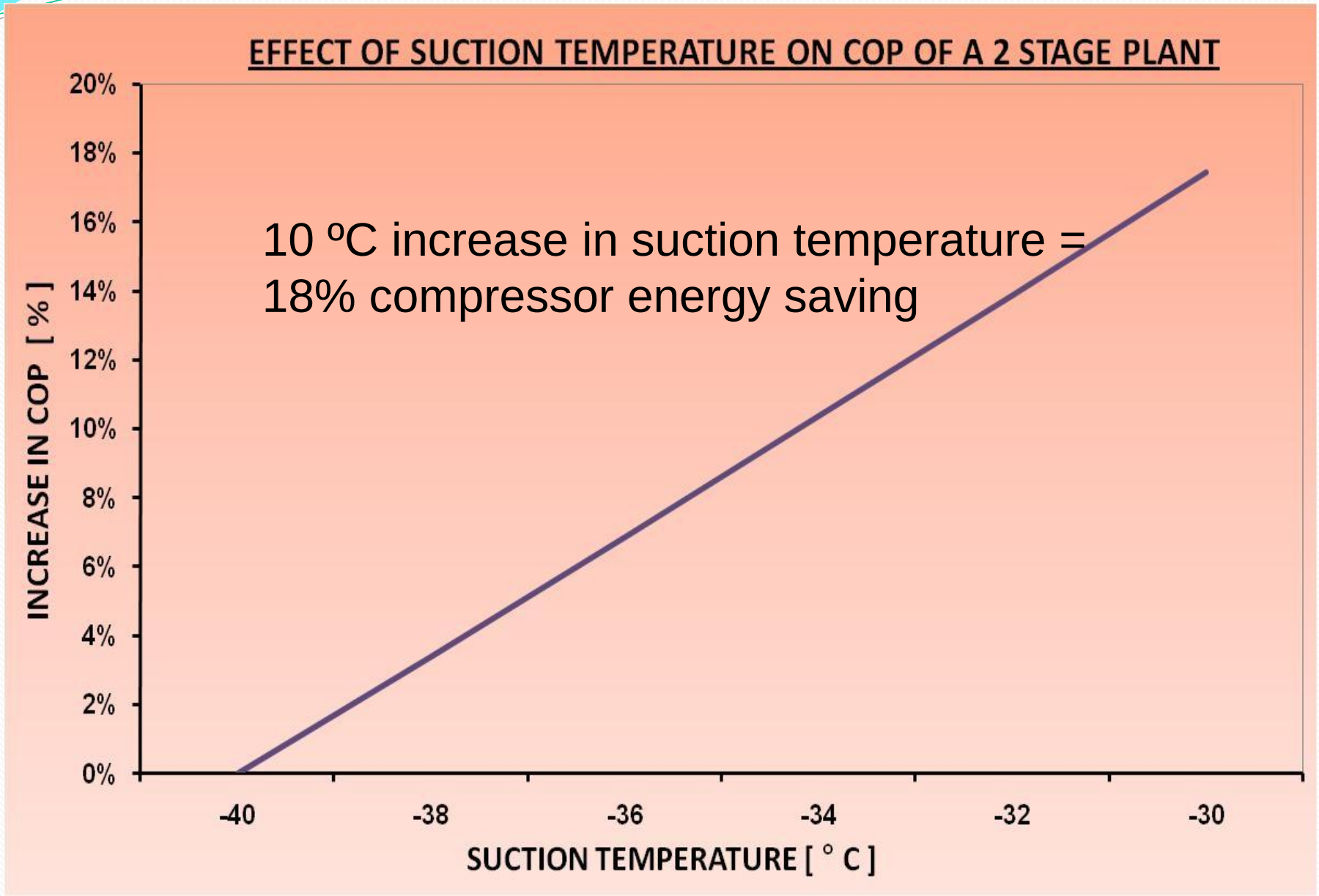
EFFECT OF SUCTION TEMPERATURE ON COP OF A 2 STAGE PLANT
10 ºC increase in suction temperature =
18% compressor energy saving
INCREASE IN COP [%]
20%
18%
16%
14%
12%
10%
8%
6%
4%
2%
0%
-40
-38
-36
-34
-32
-30
SUCTION TEMPERATURE [° C]

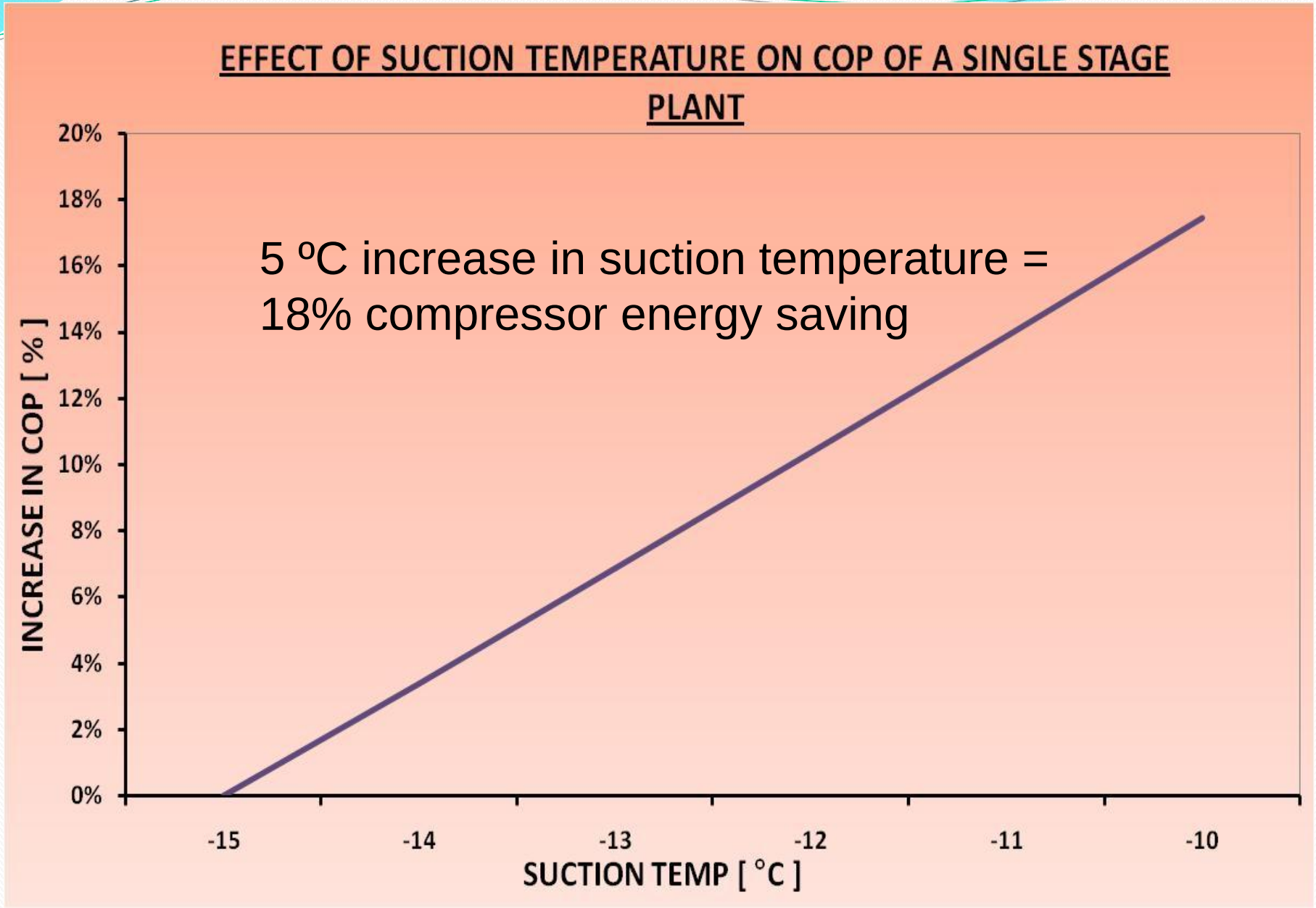
EFFECT OF SUCTION TEMPERATURE ON COP OF A SINGLE STAGE PLANT
5 ºC increase in suction temperature = 18% compressor energy saving
INCREASE IN COP [%]
20%
18%
16%
14%
12%
10%
8%
6%
4%
2%
0%
-15
-14
-13
-12
-11
-10
SUCTION TEMP [°C]

9) – remove liquid injection oil cooling

Liquid injection oil cooling on screw compressors

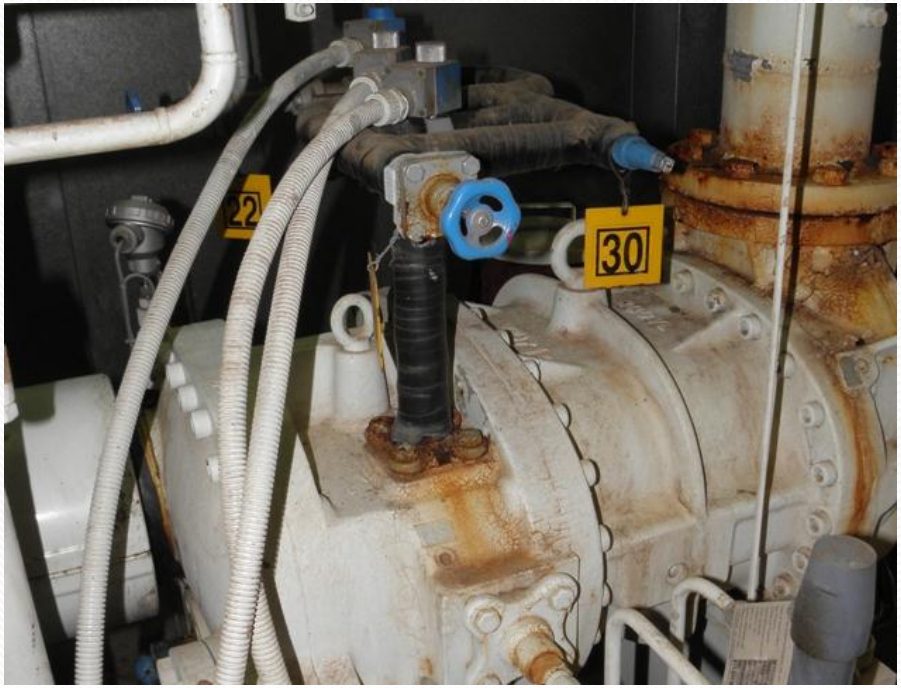

Problem: LI oil cooling reduces efficiency

Solution: Water cooled oil cooling

Liquid injection oil cooling

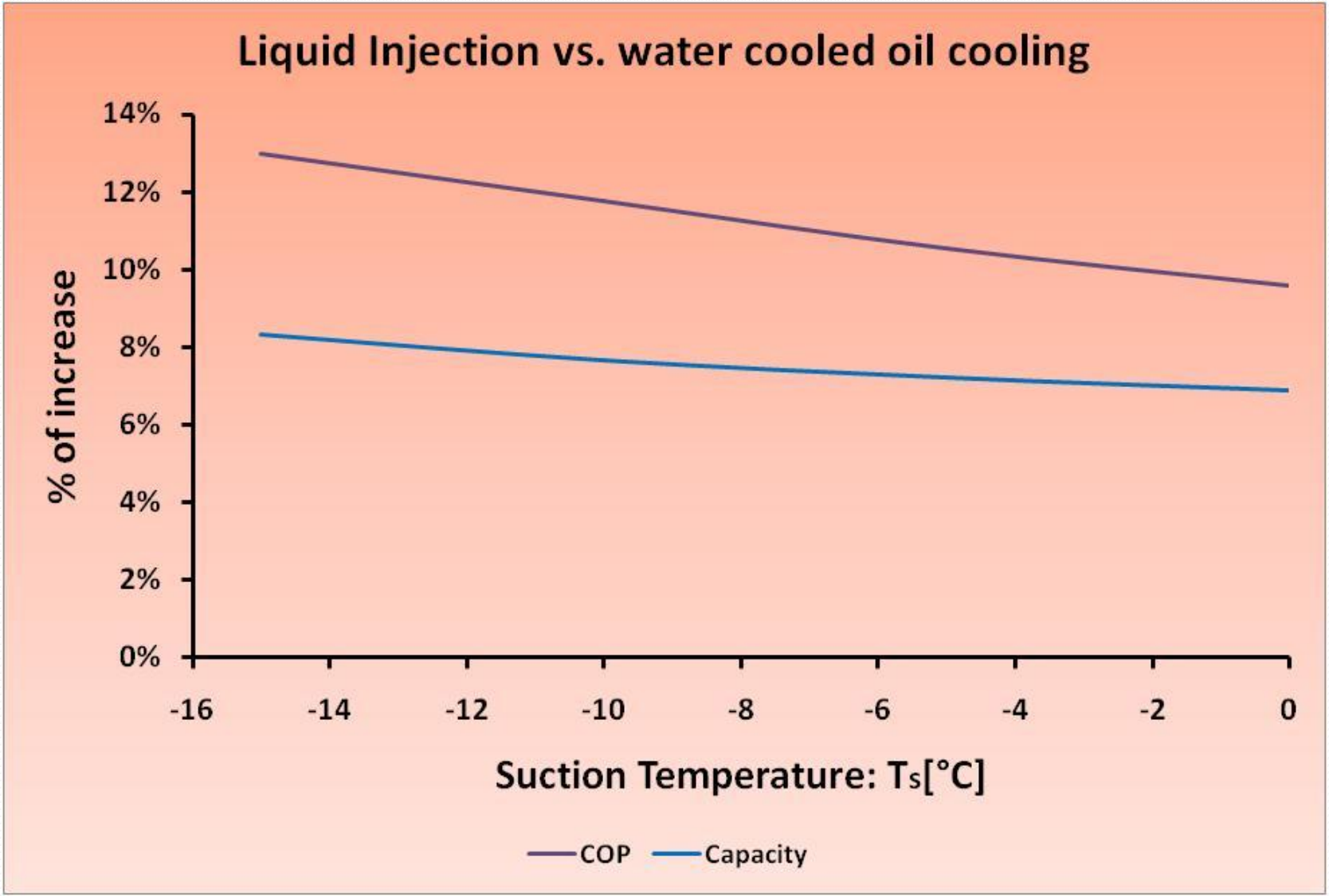

10) – defrost relief

Defrost relief

- into suction line

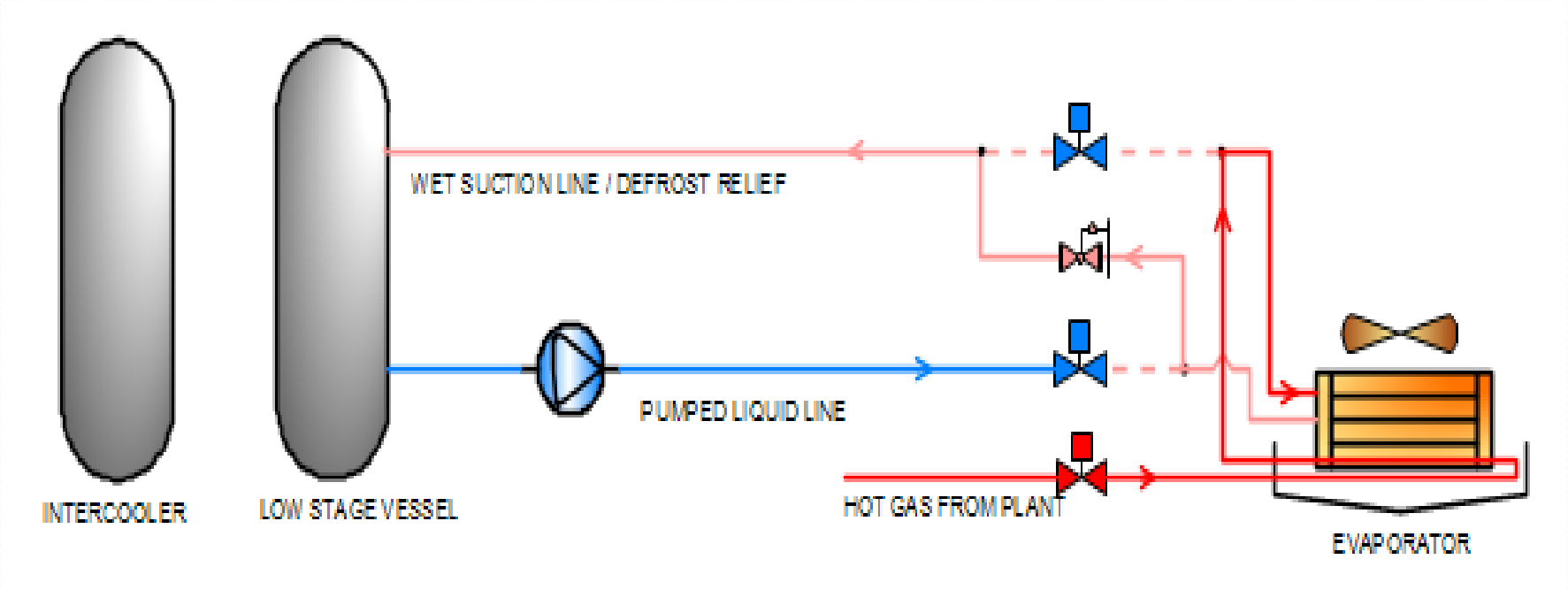

Defrost relief

- into intercooler

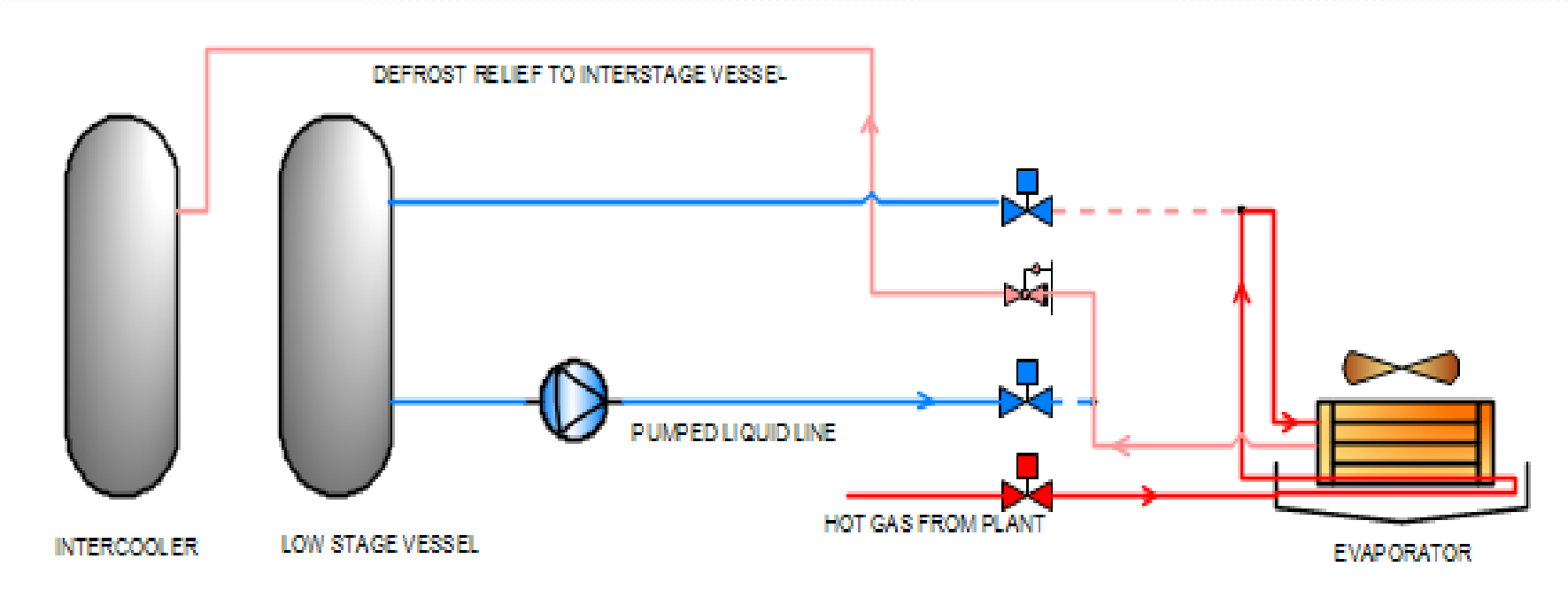

Effect of defrost on low stage compressor

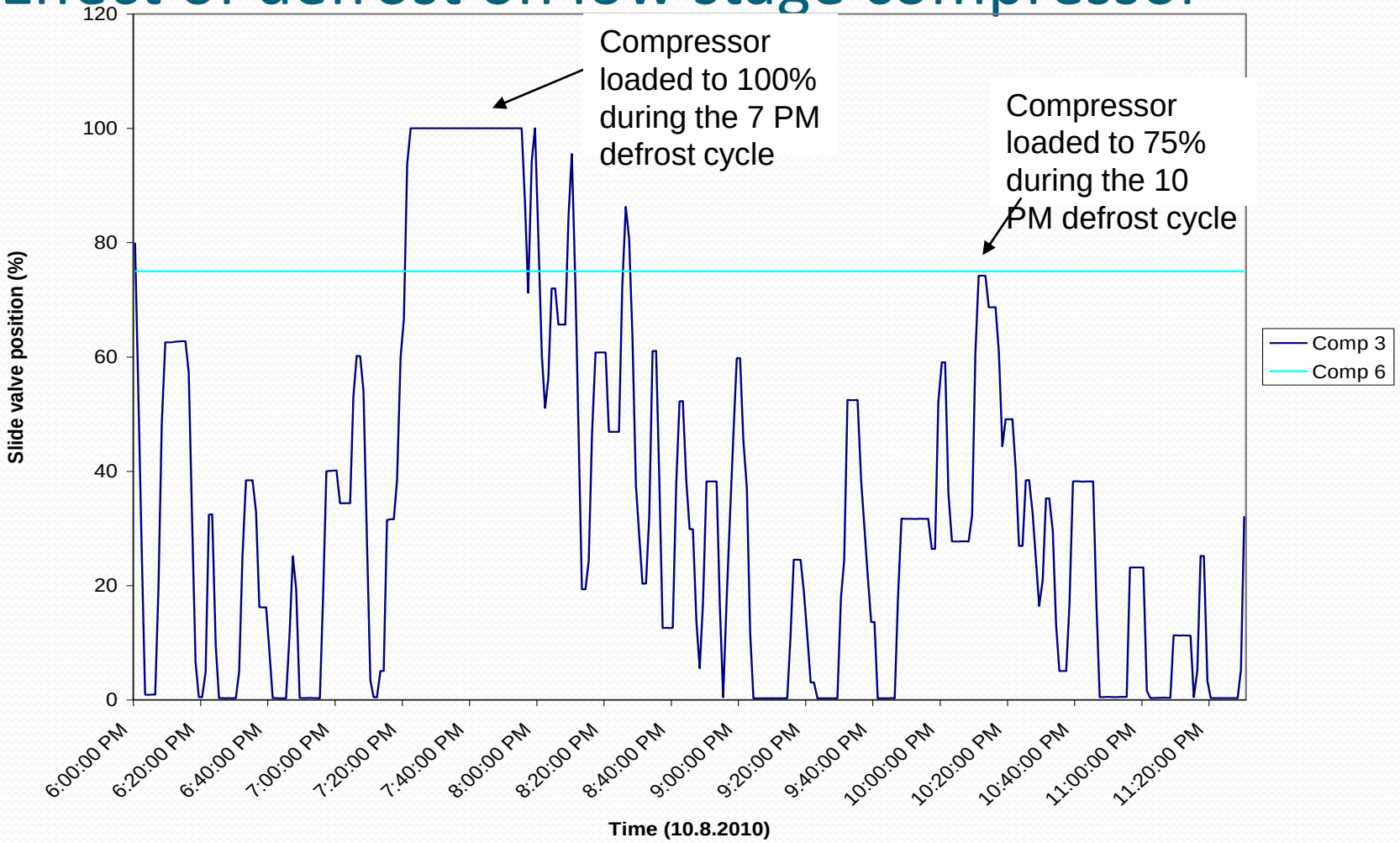

11) – non-condensable control

Auto air purging well done

- Condenser with purge pots and individual purge lines

Air purging

Old gas purgers

Manual gas purging

Solution: Autopurgers

12) – water removal

Water accumulation

- Water enters with air, but accumulates in the system
- Accumulates on the low temperature side, generally in accumulator/surge vessels
- Reduces suction pressure required to achieve setpoint evaporation temperature
- Some devices (ice cream churns) act to remove water.
- Otherwise water purger required.

MINUS 40

Effect of water on energy efficiency

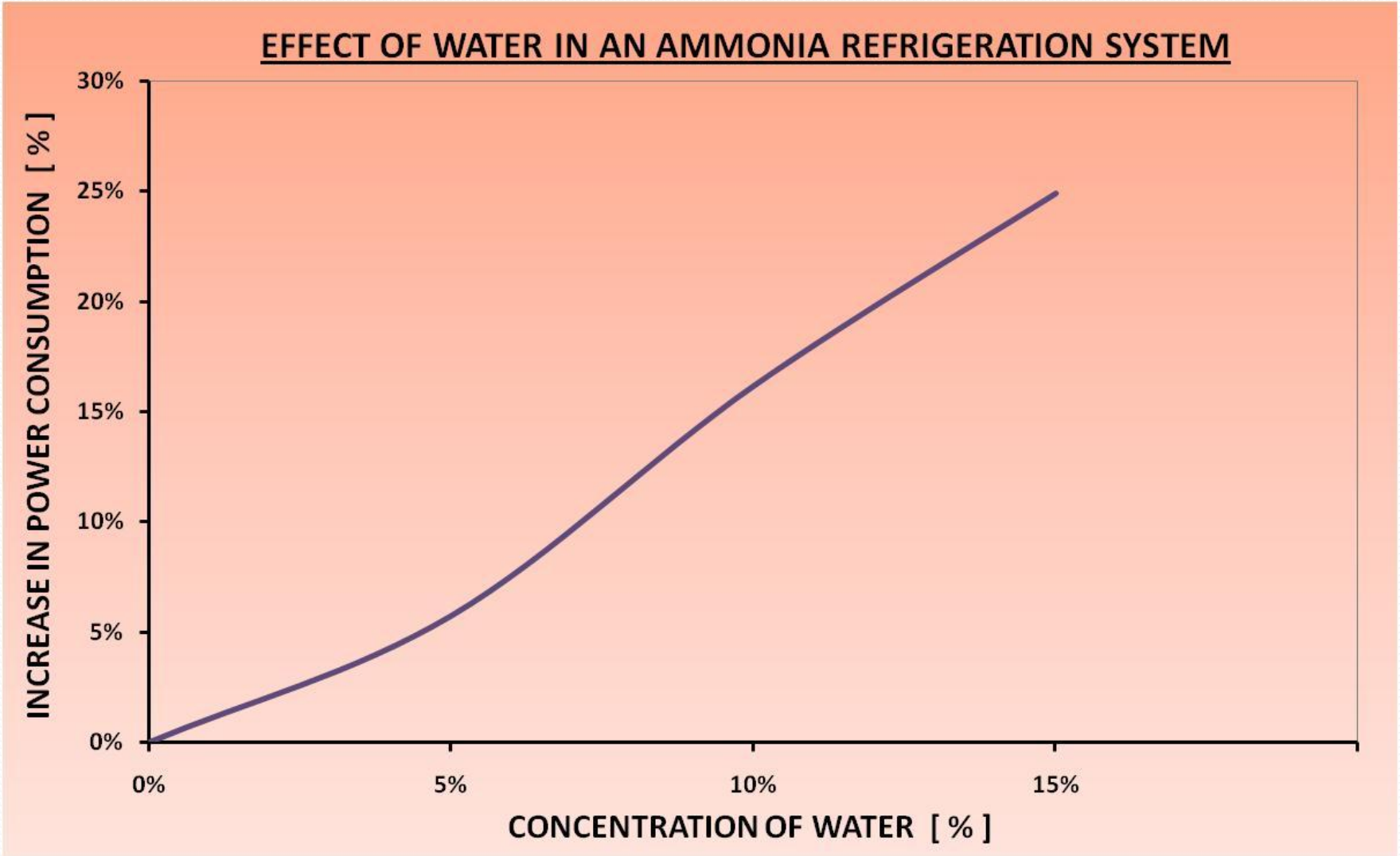

13) – oil feed rate optimisation

Oil regulation valve on screw compressor

Oil feed to screw compressors

- Industrial screw compressors require a oil feed into the compression space to seal the clearances and ensure compression.
- Insufficient oil flow – poor efficiency
- Excessive oil flow – can cause overcompression or even hydraulic locking
- Generally compressor discharge temperature used to adjust oil flow rates
- Incorrect adjustment can cause significant inefficiencies

Oil feed to screw compressors

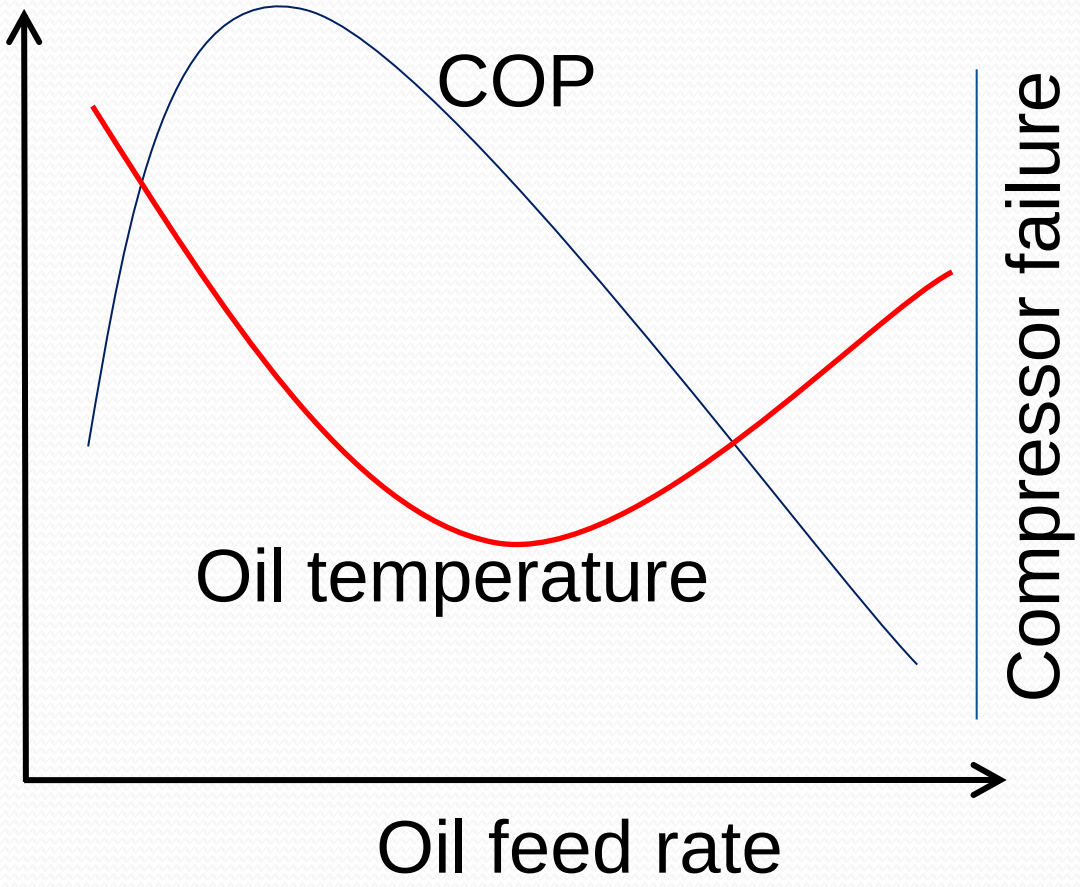

Oil feed to screw compressors - some concerns

- Different optimum flow for low- and high-stage operation
  - Same size compressor, different oil flow rates
- Different flow rates depending on compressor speed
  - Risk of hydraulic lock at low compressor speeds
  - Variable oil feed required / proportional control
- Oil flow should be adjusted on swing compressor
  - Switchover arrangement on oil feed needed
  - Two reg valves at different flow settings
- Oil flow may depend on condensing pressure
  - Variable head pressure control may require variable oil flow

14) – “bottleneck” removal

Typical "Bottlenecks"

- Undersized suction/discharge lines, or unnecessary line obstructions
  - Reduces suction, increases discharge pressure at compressor
- Undersized evaporators/condensers
  - Decreases suction, increases condensing temp
- Direct expansion evaporators
  - Limits variable head pressure control options
- Excessively long wet/dry suction lines
  - Reduces suction pressure at compressor
- Poorly designed wet suction risers
  - Reduces suction pressure at compressor
- Redundant suction regulation valves
  - Reduces suction pressure at compressor

MINUS 40

Example: Poor suction line installation

Bottlenecks in discharge lines

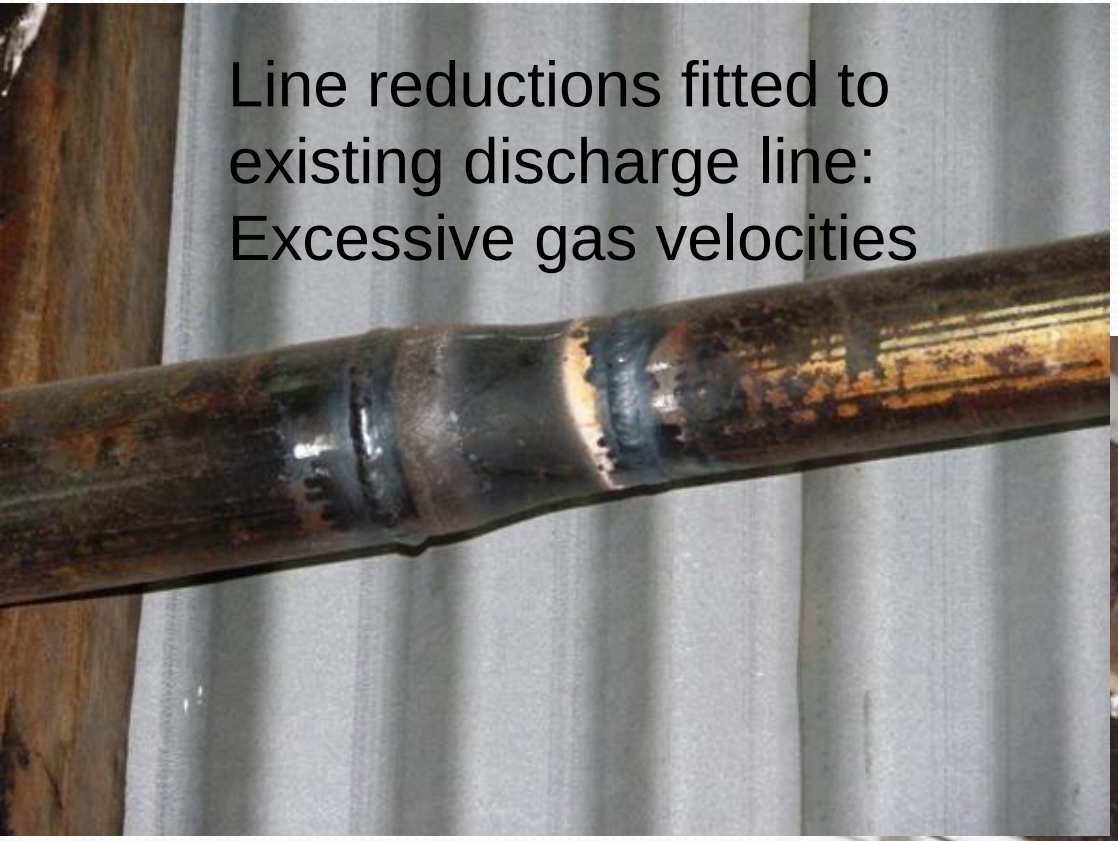

Redundant valves not
removed from discharge line

Reducing discharge line pressure drops

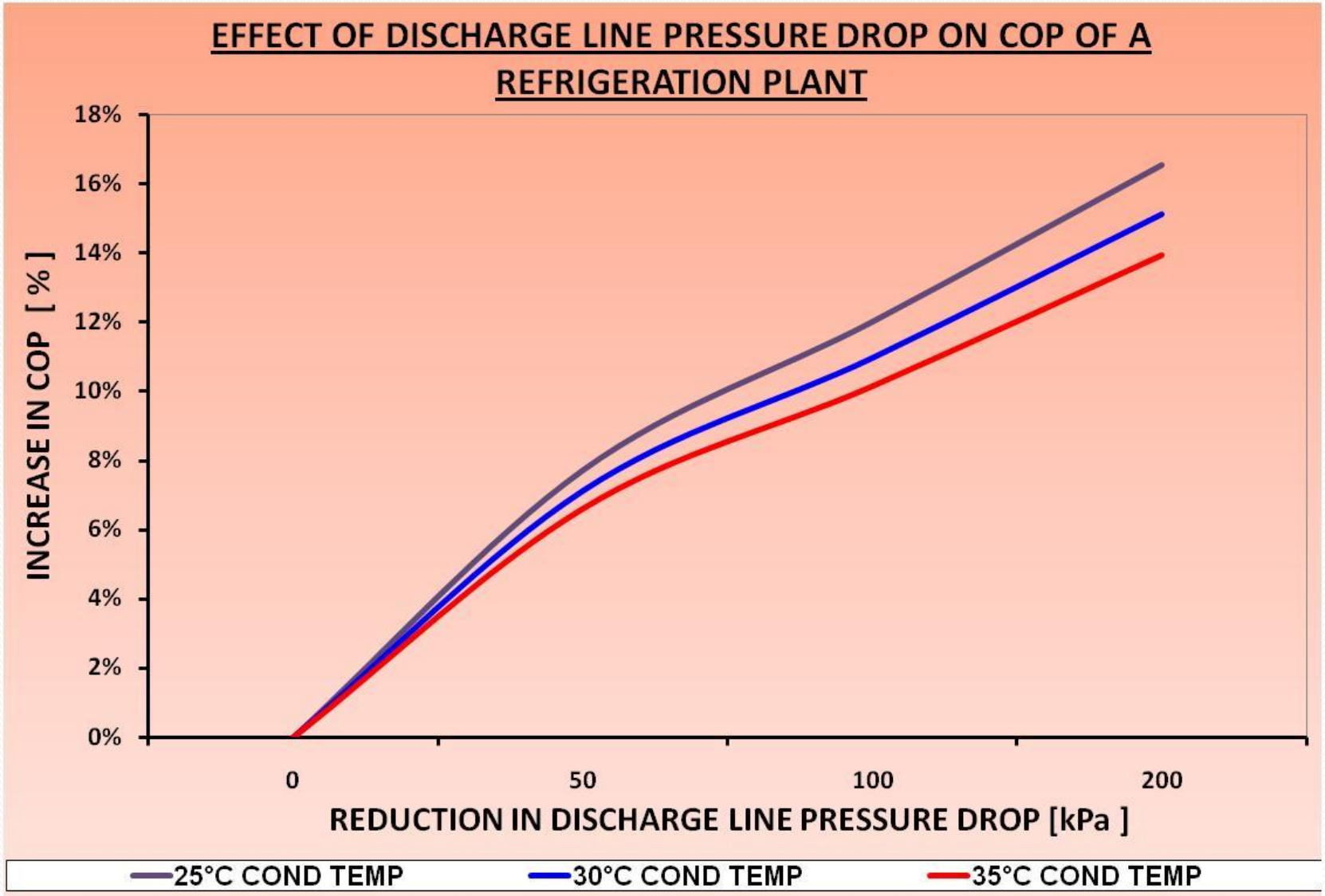

Conclusions and Recommendations

- Analyse your plant for energy savings opportunities – there are many!
- Opportunities not feasible a few years ago are now viable due to higher power costs
- Many opportunities are available at relatively minor cost, or require controls upgrade only
- Implement viable opportunities NOW
- Convert Freon systems to ammonia plant
- Apply for government money –there is a lot going around!

MINUS 40

Government Finance and Funding

- NSW Energy Saver Program
- NSW Energy Saving Scheme
- Low Carbon Australia
- Clean Technology Investment Program
- Government funding scenario for Example Abattoir

NSW Energy Saver Program

- **70%** subsidy for Energy Audit
- **30 hours** engineering support for implementation
- **$20,000** discretionary Early Adopter Funding for projects >$100,000

Limitations:

- NSW sites only
- Not applicable to EEO companies
- Suitable for sites spending $60K+ p.a. on electricity

NSW Energy Saving Scheme

- Energy Savings Certificates [ESCs] created for energy savings projects.
- ESCs can be traded for **CASH**
- Typical $500k Energy Efficiency project can attract ESCs worth **$10,000 to $30,000**

Limitations:

- NSW only, all sites

Low Carbon Australia

LOWCARBONAUSTRALIA.COM.AU

LOWCARBON AUSTRALIA

- Low Interest Finance for Energy Savings projects
- Operational Leases
- Financial Leases
- On-power-bill financing
- Direct loans up to **50%**

Limitations:

- All sites in Australia
- Not applicable to greenfield sites
- Must satisfy carbon reduction criteria

Clean Technology Investment Program

- **33% or 50%** of capital cost of Energy Efficiency project as **GRANT** (Grants < $10M)

Site gets:

- **50%**, if company turnover <$100M **and** requested funding <$500,000
- **33%**, for all other grants up to $10M

Limitations

- All sites in Australia
- Manufacturing industry only, esp food (= all meat works)
- Must satisfy carbon reduction criteria

Government funding scenario for Example abattoir

- Total project cost for Energy Efficiency projects on site: $250,000
- Energy savings estimated at $93,000 power per annum, **2.7** year simple payback.
- Further engineering costs are applied to fully scope the project and accurately estimate the savings, say $30,000
- Example applies for a **low interest loan** from Low Carbon Australia (up to **50%)**, repayable over 5 years
- Example obtains a **capital grant** from the Clean Technology Investment Program
- Example expends another $15,000 on application fees and compliance costs

Government funding scenario for Example abattoir

Cost item	With support	Without support
Project capital cost	$250,000	$250,000
Plus prior engineering	$30,000	$30,000
Application and compliance costs	$15,000	$0
Less LCA finance	($147,500)	$0
Less CTIP grant	($147,500)	$0
Nett project cost (Capex)	**$0**	**$280,000**
Annual power cost saving	$93,000	$93,000
Less annual LCA repayment	($17,000)	$0
Nett annual saving	$76,000	$93,000
Simple payback on Capex	**0**	**3.01**

Any Questions???